MIDTOWN COLLECTION AT FOOTHILLS FARM FILING NO. 1 & 2

CITY OF COLORADO SPRINGS, COUNTY OF EL PASO, STATE OF COLORADO

SMALL LOT PUD DEVELOPMENT PLAN

TITLE SHEET

AUGUST 2017

LEGAL DESCRIPTION:

MIDTOWN COLLECTION AT FOOTHILLS FARM FILING NOS. 1 AND 2

REQUIRED PARKING:

83 SINGLE FAMILY LOTS
2.0 SPACES PER LOT
83 X 2 SPACES/LOT = 166 SPACES

GUEST PARKING
1/2 SPACE/LOT = 42 SPACES

ACCESSIBLE PARKING = 0 SPACES

TOTAL REQUIRED – 208 SPACES (108 FILING 1 – 100 FILING 2)

PROVIDED PARKING:

83 SINGLE FAMILY LOTS – 2 CAR GARAGE W/ 20' DRIVEWAY
2.0 SPACES PER GARAGE
2.0 SPACES PER DRIVEWAY

83 X 2 GARAGE = 166 SPACES
83 X 2 DRIVEWAY = 166 SPACES
GUEST PARKING = 51 SPACES
47' PUBLIC RIGHT–OF–WAY (MODERN MEADOW WAY) – PARKING ALLOWED ON ONE SIDE
30' ACCESS STREET – NO PARKING ALLOWED

ACCESSIBLE PARKING = 2 SPACES (1 FILING 1 – 1 FILING 2)

TOTAL PARKING SPACES PROVIDED = 383 SPACES (179 FILING 1 – 204 FILING 2)

ALL PARKING SPACES 9'x18'

COMMON OPEN SPACE:

REQUIRED: 400 SF/LOT (W/ PARK CREDIT) = 0.76 ACRES

600 SF/LOT (W/O PARK CREDIT) = 1.14 ACRES

PROVIDED:	FILING 1 TRACT A:	0.81 ACRES
	FILING 1 TRACT B:	0.12 ACRES
	FILING 1 TRACT C:	1.22 ACRES
	FILING 2 TRACT A:	1.21 ACRES
	FILING 2 TRACT B:	0.36 ACRES
	FILING 2 TRACT C:	0.07 ACRES
	FILING 2 TRACT D:	0.02 ACRES
	FILING 2 TRACT E:	0.02 ACRES
	TOTAL:	3.83 ACRES

LOT SETBACKS:

FRONT: 10' BUILDING
SIDE: 5' BUILDING ON END UNITS
1' OR 5' BUILDING INTERNAL UNITS
(6' BETWEEN BUILDINGS)
REAR: 18.5' SETBACK FROM R.O.W. TO FACE OF GARAGE
20' SETBACK FROM CURB TO FACE OF GARAGE
10' REAR BUILDING
(SEE DETAIL SHEET 2)

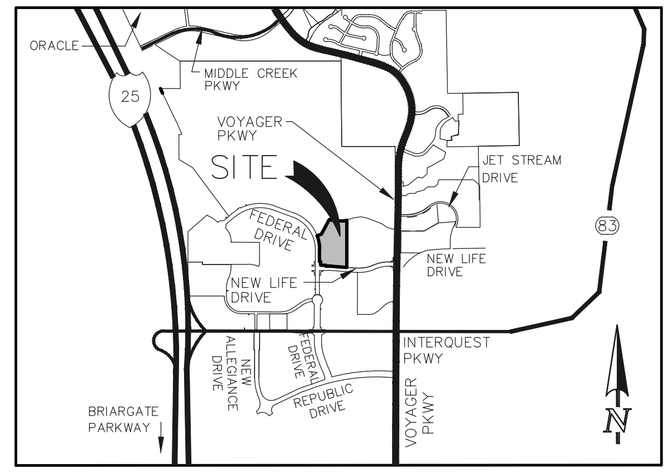

VICINITY MAP

N.T.S.

PROJECT TEAM:

CIVIL ENGINEER/APPLICANT

CLASSIC CONSULTING ENGINEERS & SURVEYORS, LLC
619 N CASCADE AVE. , SUITE 200
COLORADO SPRINGS, CO 80903
MR. KYLE CAMPBELL, P.E.
(719) 785–0790

LANDSCAPE ARCHITECT

N.E.S. INC.
619 N. CASCADE AVE SUITE 200
COLORADO SPRINGS, CO 80903
MS. KATIE WHITFORD
(719) 471–0073

DEVELOPER

PULPIT ROCK INVESTMENTS LLC
6385 CORPORATE DRIVE SUITE 200
COLORADO SPRINGS, CO 80919
(719) 592–9333

OWNER

ALLISON VALLEY DEV COMPANY LLC
1755 TELSTAR DR. STE 211
COLORADO SPRINGS, CO 80920
(719) 260–7477

SITE DATA:

TOTAL ACREAGE:	10.08 ACRES
TOTAL LOTS:	83 LOTS
GROSS DENSITY:	8.23 DU / AC
TOTAL LOT AREA:	185,400 SF / 4.26 AC / 42.3%
TOTAL TRACT AREA:	168,507 SF / 3.87 AC / 38.4%
TOTAL R.O.W. AREA:	85,134 SF / 1.95 AC / 19.3%
EXISTING LAND USE:	VACANT
PROPOSED LAND USE:	HIGH DENSITY SMALL LOT SINGLE–FAMILY RESIDENTAIL (83 LOTS)
EXISTING ZONING:	A (CPC ZC 04–00255, ORD. 05–132)/PUD (COMMERCIAL, 45' MAX. BUILDING HEIGHT AND 75' MAX. BUILDING HEIGHT FOR ARCHITECTURAL FEATURES, 844361 SF) (CPC PUZ 05–00096, ORD. 06–46)
PROPOSED ZONING:	PUD (SMALL LOT SINGLE FAMILY DETACH RESIDENTIAL, 35' MAX. BUILDING HEIGHT, 12–24 DWELLING UNITES PER ACRE) (CPC PUZ 17–00072)
MAX. BUILDING HEIGHT:	35'
AVERAGE LOT SIZE:	2,100 SF
MASTER PLAN:	THE FARM (CPC MP 04–00254–A4MN16)
TAX ID NO.	6220100019, 6220100021, 6220200006, 6220100022
DEVELOPMENT SCHEDULE:	FILING 1 – FALL 2017 AND FILING 2 – FALL 2018 (OR AS DEMAND DICTATES)
DRAINAGE BASINS:	BLACK SQUIRREL CREEK AND ELKHORN CREEK

GENERAL NOTES:

1. THIS PROJECT WILL CONFORM TO THE CITY OF COLORADO SPRINGS "SMALL LOT PLANNED UNIT DEVELOPMENTS – REVIEW CRITERIA AND GUIDELINES" MANUAL DATED APRIL 22, 2005.
2. THE 47' RIGHT–OF–WAY REQUIRES A 5' PUBLIC IMPROVEMENTS EASEMENT ON BOTH SIDES OF THE STREET.
3. SIDEWALKS ADJACENT TO 47' PUBLIC RIGHT–OF–WAY WILL BE DESIGNED AND INSTALLED PER CITY STANDARDS. SIDEWALKS WITHIN THE PRIVATE TRACTS NOT IN A PUBLIC IMPROVEMENT EASEMENT SHALL BE INSTALLED 5' WIDE.
4. ALL TRACTS FOR PRIVATE ACCESS, OPEN SPACE, PARKING, LANDSCAPING, PUBLIC UTILITIES, PUBLIC DRAINAGE, PUBLIC IMPROVEMENTS, TRAILS, FENCES, WALLS, MAILBOXES AND SIGNAGE, TO BE OWNED BY THE ALLISON VALLEY METROPOLITAN DISTRICT NO. 2 AND MAINTAINED BY THE MIDTOWN COLLECTION AT FOOTHILLS FARM HOMEOWNERS ASSOCIATION. PRIVATE ACCESS IS GRANTED TO THOSE LOTS ADJACENT TO THE TRACTS. OWNERSHIP OF SAID TRACT IS TO BE CONVEYED BY SEPARATE INSTRUMENT.
5. THE AREA INCLUDED IN THIS PLAN, MIDTOWN COLLECTION AT FOOTHILLS FARM FILINGS NO. 1 & 2, IS INCLUDED IN THE ALLISON VALLEY METROPOLITAN DISTRICT NO. 1 PER RECEPTION NO. 215127282 AND ALLISON VALLEY METROPOLITAN DISTRICT NO. 2 PER RECEPTION NO.'S 206176523, 207002264, 214095098 AND 214011456 AND FUTURE MIDTOWN COLLECTION AT FOOTHILLS FARM HOA.
6. THIS PROPERTY MAY BE IMPACTED BY NOISE AND OTHER SIMILAR SENSORY EFFECTS OF FLIGHT BY AIRCRAFT USED IN THE UNITED STATES AIR FORCE ACADEMY'S AIRMANSHIP PROGRAM. THIS NOTICE SHALL REMAIN IN EFFECT UNTIL THE AIR FORCE ACADEMY SHALL CEASE TO BE USED FOR FLIGHT TRAINING PURPOSES. ALL PROPERTY WITHIN THIS SUBDIVISION IS SUBJECT TO AN AVIGATION EASEMENT SEE PLAT FOR MIDTOWN COLLECTION AT FOOTHILLS FARM FILING NO. 1 AND 2.
7. THERE SHALL BE NO DIRECT VEHICULAR ACCESS FROM LOTS TO FEDERAL DRIVE OR NEW LIFE DRIVE.
8. SPEED LINE OF SIGHT ANALYSIS IS REQUIRED FOR ALL FENCING AND VEGETATION OTHER THAN DECIDUOUS TREES, AT STREET INTERSECTIONS.
9. PRIVATE PARKS WILL BE DEVELOPED WITH LOW WATER USE SOD AT A MINIMUM.
10. NO PORTION OF THIS SITE IS LOCATED WITHIN A FLOODPLAIN AS DETERMINED BY THE FLOOD INSURANCE RATE MAPS (F.I.R.M.) MAP NUMBER 08041C 0506F, EFFECTIVE DATE, MARCH 17, 1997.
11. ALL LANDSCAPING NOT WITHIN PRIVATE PROPERTY, SHALL BE INSTALLED CONCURRENT WITH DEVELOPMENT PRIOR TO OCCUPANCY PER PHASE.
12. PRIVATE TRACTS WILL CONTAIN PEDESTRIAN LIGHTING BOLLARDS WITH LESS THAN 100 WATT, FULL CUT OFF, DOWN CAST FIXTURES 3'–4' IN HEIGHT.
13. PRIVATE FENCING WITHIN COURTYARD SHALL NOT EXCEED 3'–4' IN HEIGHT.
14. ALL HOMES SHALL BE ADDRESSED OFF THE NAMED STREET AT THE REAR OF THE HOME. ALL HOMES IN MIDTOWN COLLECTION AT FOOTHILLS FARM FILING NO. 1 SHALL HAVE A MODERN MEADOW LOOP ADDRESS. ADDRESSES FOR LOTS 1–19 FILING NO. 1 SHALL ONLY BE PLACED ON THE SIDE OF THE BUILDING (GARAGE) ABUTTING MODERN MEADOW LOOP. ADDRESSES FOR LOTS 20–40 FILING NO. 1 AND LOTS 1–43 FILING NO. 2 SHALL BE PLACED ON BOTH THE FRONT AND REAR OF THE BUILDING LOCATED ON THE LOTS.
15. NO ON STREET PARKING ALLOWED ON ACCESS STREETS.
16. PUBLIC IMPROVEMENTS TO ADJACENT FEDERAL DRIVE AND NEW LIFE DRIVE LIMITED TO SIDEWALK AND PED RAMPS ONLY. THE DEVELOPER IS RESPONSIBLE TO CONSTRUCT THE PUBLIC SIDEWALK ADJACENT TO FEDERAL DRIVE AND NEW LIFE DRIVE ADJACENT TO THE DEVELOPMENT, INCLUDING PUBLIC SIDEWALKS IN TRACT A.
17. THE ALLISON VALLEY METROPOLITAN DISTRICT NO. 2 WILL BE RESPONSIBLE FOR MAINTENANCE OF ALL ISLANDS AND MEDIANS WITHIN ANY PUBLIC RIGHT OF WAY WITHIN THE BOUNDARY OF THIS DEVELOPMENT.
18. DRIVEWAYS SHALL BE MINIMUM 20' LONG AS MEASURED FROM BACK OF CURB TO STRUCTURE. SEE DETAIL ON SHEET 2 FOR CLARIFICATION.
19. ALL DRIVEWAYS ACCESSING PLENTIFUL DRIVE, MODERN MEADOW LOOP, AND SUNSHINE VALLEY WAY SHALL MAINTAIN A MINIMUM WIDTH OF 18' FOR TWO–CAR DRIVEWAYS AND 10' FOR ONE–CAR DRIVEWAYS.
20. THIS DEVELOPMENT IS SUBJECT TO THE FOOTHILLS FARM'S DESIGN REVIEW STANDARDS AND GUIDELINES.
21. ALL PRIVATE SIDEWALK/TRAIL SEGMENTS SHALL BE CONSTRUCTED OF CONCRETE AND NOT LESS THAN 5' IN WIDTH WITHIN COMMON OPEN SPACE AND 5' FOR PEDESTRIAN CONNECTIONS TO ON–STREET AND GUEST PARKING FACILITIES AND COMMON OPEN SPACE CONSTRUCTED PER CITY STANDARD DETAIL.
22. THE DESIGN PROFESSIONAL RESPONSIBLE FOR THIS PLAN HAVE FAMILIARIZED THEMSELVES WITH ALL CURRENT ACCESSIBILITY CRITERIA AND SPECIFICATIONS AND THE PROPOSED PLAN REFLECTS ALL SITE ELEMENTS REQUIRED BY THE APPLICABLE ADA DESIGN STANDARDS AND GUIDELINES AS PUBLISHED BY THE UNITED STATES DEPARTMENT OF JUSTICE. APPROVAL OF THIS PLAN BY THE CITY OF COLORADO SPRINGS DOES NOT ASSURE COMPLIANCE WITH THE ADA OR ANY OTHER FEDERAL OR STATE ACCESSIBILITY LAWS OR ANY REGULATIONS OR GUIDELINES ENACTED OR PROMULGATED UNDER OR WITH RESPECT TO SUCH LAWS. SOLE RESPONSIBILITY FOR COMPLIANCE WITH FEDERAL AND STATE ACCESSIBILITY LAWS LIES WITH THE PROPERTY OWNER.
23. ALL CURB AND GUTTER POSING A SAFETY HAZARD, DAMAGED, EXHIBITING EXCESSIVE DETERIORATION OR NOT MEETING CURRENT CITY ENGINEERING STANDARDS ALONG FEDERAL DR. AND NEW LIFE DR. ADJACENT TO THE SITE WILL NEED TO BE REMOVED AND REPLACED PRIOR TO ISSUANCE OF THE CERTIFICATE OF OCCUPANCY (C.O.). AN ON–SITE MEETING CAN BE SET UP WITH THE ENGINEERING DEVELOPMENT REVIEW INSPECTOR TO DETERMINE WHAT, IF ANY IMPROVEMENTS ARE REQUIRED. THE INSPECTOR CAN BE REACHED AT 385–5977.
24. THE BLACK SQUIRREL CREEK CHANNEL IMPROVEMENTS FROM THE EASTERN SIDE OF THE PEDESTRIAN BRIDGE TO THE WESTERN EDGE OF VOYAGER PARKWAY SHALL BE FULLY CONSTRUCTED AND ACCEPTED FOR THE PROBATIONARY PERIOD BY THE CITY'S PUBLIC WORKS DEPARTMENT OR ASSURANCES POSTED FOR 100% OF THE PUBLIC IMPROVEMENT COST PRIOR TO THE ISSUANCE OF THE FIRST BUILDING PERMIT WITHIN THE MIDTOWN COLLECTION AT FOOTHILLS FARM DEVELOPMENT PROJECT. ANY DEVIATION FROM THIS STANDARD PROCESS WILL REQUIRE A DEVELOPMENT AGREEMENT BETWEEN THE DEVELOPER AND THE CITY.
25. THE DENSITY, DESIGN AND DIMENSIONAL CONTROLS SET FORTH IN THIS PUD DEVELOPMENT PLAN SHALL GOVERN THE MIDTOWN COLLECTIONS AT FOOTHILLS FARM PROJECT. ALL OTHER DENSITY, DESIGN AND DIMENSIONAL CONTROLS ESTABLISHED UNDER CITY CODE CHAPTER 7 SHALL NOT APPLY UNLESS OTHERWISE STATED BY THIS PUD DEVELOPMENT PLAN.

TRACT TABLE

TRACT	SIZE (S.F.)	USE	OWNERSHIP	MAINTENANCE
FILING 1				
TRACT A	36,855 SF	PRIVATE ACCESS, OPEN SPACE, PARKING, LANDSCAPING, PUBLIC UTILITIES, PUBLIC DRAINAGE, PUBLIC IMPROVEMENTS, TRAILS, FENCES, WALLS, MAILBOXES AND SIGNAGE	ALLISON VALLEY METROPOLITAN DISTRICT NO. 2	MIDTOWN COLLECTION AT FOOTHILLS FARM HOA
TRACT B	5,375 SF	PRIVATE ACCESS, OPEN SPACE, PARKING, LANDSCAPING, PUBLIC UTILITIES, PUBLIC DRAINAGE, PUBLIC IMPROVEMENTS, TRAILS, FENCES, WALLS, MAILBOXES AND SIGNAGE	ALLISON VALLEY METROPOLITAN DISTRICT NO. 2	MIDTOWN COLLECTION AT FOOTHILLS FARM HOA
TRACT C	53,171 SF	PRIVATE ACCESS, OPEN SPACE, PARKING, LANDSCAPING, PUBLIC UTILITIES, PUBLIC DRAINAGE, PUBLIC IMPROVEMENTS, TRAILS, FENCES, WALLS, MAILBOXES AND SIGNAGE	ALLISON VALLEY METROPOLITAN DISTRICT NO. 2	MIDTOWN COLLECTION AT FOOTHILLS FARM HOA
FILING 2				
TRACT A	52,577 SF	PRIVATE ACCESS, OPEN SPACE, PARKING, LANDSCAPING, PUBLIC UTILITIES, PUBLIC DRAINAGE, PUBLIC IMPROVEMENTS, TRAILS, FENCES, WALLS, MAILBOXES AND SIGNAGE	ALLISON VALLEY METROPOLITAN DISTRICT NO. 2	MIDTOWN COLLECTION AT FOOTHILLS FARM HOA
TRACT B	15,857 SF	PRIVATE ACCESS, OPEN SPACE, PARKING, LANDSCAPING, PUBLIC UTILITIES, PUBLIC DRAINAGE, PUBLIC IMPROVEMENTS, TRAILS, FENCES, WALLS, MAILBOXES AND SIGNAGE	ALLISON VALLEY METROPOLITAN DISTRICT NO. 2	MIDTOWN COLLECTION AT FOOTHILLS FARM HOA
TRACT C	3,182 SF	PRIVATE ACCESS, OPEN SPACE, PARKING, LANDSCAPING, PUBLIC UTILITIES, PUBLIC DRAINAGE, PUBLIC IMPROVEMENTS, TRAILS, FENCES, WALLS, MAILBOXES AND SIGNAGE	ALLISON VALLEY METROPOLITAN DISTRICT NO. 2	MIDTOWN COLLECTION AT FOOTHILLS FARM HOA
TRACT D	745 SF	PRIVATE ACCESS, OPEN SPACE, PARKING, LANDSCAPING, PUBLIC UTILITIES, PUBLIC DRAINAGE, PUBLIC IMPROVEMENTS, TRAILS, FENCES, WALLS, MAILBOXES AND SIGNAGE	ALLISON VALLEY METROPOLITAN DISTRICT NO. 2	MIDTOWN COLLECTION AT FOOTHILLS FARM HOA
TRACT E	745 SF	PRIVATE ACCESS, OPEN SPACE, PARKING, LANDSCAPING, PUBLIC UTILITIES, PUBLIC DRAINAGE, PUBLIC IMPROVEMENTS, TRAILS, FENCES, WALLS, MAILBOXES AND SIGNAGE	ALLISON VALLEY METROPOLITAN DISTRICT NO. 2	MIDTOWN COLLECTION AT FOOTHILLS FARM HOA

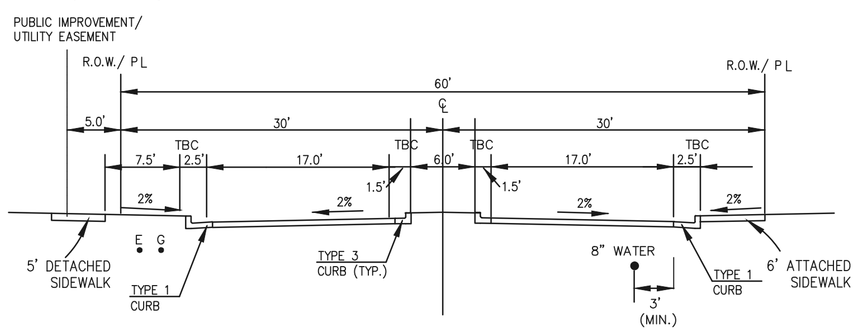

MODIFIED 60' R.O.W. RESIDENTIAL (LOCAL) PUBLIC STREET
NEW FARM LANE
SCALE: 1" = 10'

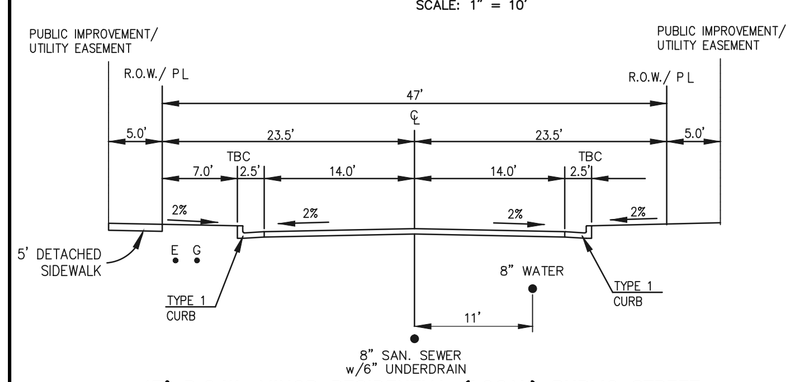

47' R.O.W. MINOR RESIDENTIAL (LOCAL) PUBLIC STREET
MODERN MEADOW LOOP
SCALE: 1" = 10'

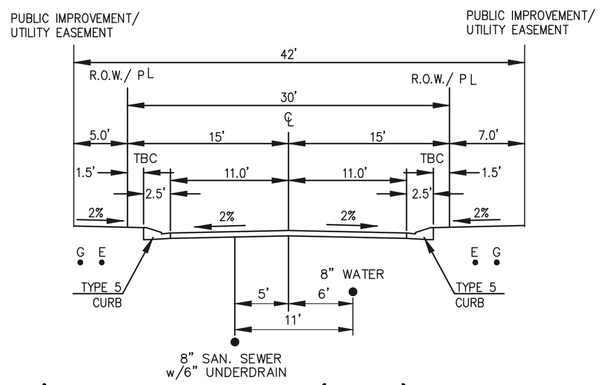

30' R.O.W. PUD RESIDENTIAL (ACCESS) PUBLIC STREET
MODERN MEADOW LOOP
PLENTIFUL DRIVE
SUNSHINE VALLEY WAY
SCALE: 1" = 10'

SHEET INDEX

COVER SHEET	SHEET 1 OF 19
DEVELOPMENT PLAN	SHEET 2 OF 19
DEVELOPMENT PLAN	SHEET 3 OF 19
PRELIMINARY GRADING PLAN	SHEET 4 OF 19
PRELIMINARY GRADING PLAN	SHEET 5 OF 19
PRELIMINARY UTILITY & PUBLIC FACILITIES PLAN	SHEET 6 OF 19
PRELIMINARY UTILITY & PUBLIC FACILITIES PLAN	SHEET 7 OF 19
DEVELOPMENT PLAN DETAIL SHEET	SHEET 5 OF 19
PRELIMINARY LANDSCAPE PLAN	SHEET 9 OF 19
PRELIMINARY LANDSCAPE PLAN	SHEET 10 OF 19
PRELIMINARY LANDSCAPE PLAN	SHEET 11 OF 19
STREETSCAPE PLAN	SHEET 12 OF 19
STREETSCAPE PLAN	SHEET 13 OF 19
PRELIMINARY ELEVATIONS	SHEET 14 OF 19
PRELIMINARY ELEVATIONS	SHEET 15 OF 19
PRELIMINARY ELEVATIONS	SHEET 16 OF 19
PRELIMINARY ELEVATIONS	SHEET 17 OF 19
PRELIMINARY ELEVATIONS	SHEET 18 OF 19
PRELIMINARY ELEVATIONS	SHEET 19 OF 19

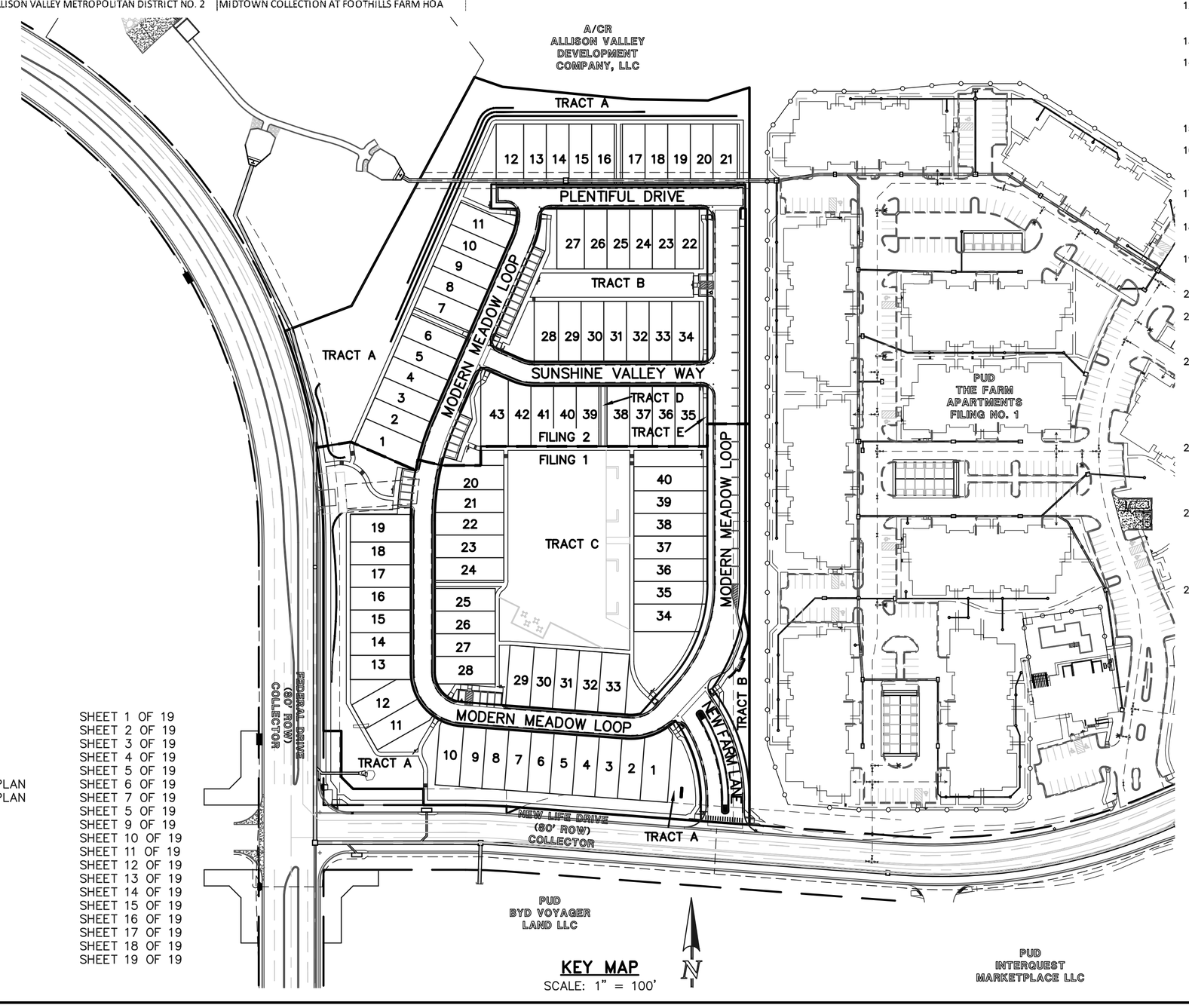

KEY MAP
SCALE: 1" = 100'

CPC PUD 17–00072

CLASSIC CONSULTING ENGINEERS & SURVEYORS

619 N. Cascade Avenue, Suite 200 (719)785–0790
Colorado Springs, Colorado 80903 (719)785–0799 (Fax)

MIDTOWN COLLECTION AT FOOTHILLS FARM
FILING NO. 1 & 2
SMALL LOT PUD DEVELOPMENT PLAN
TITLE SHEET

DESIGNED BY	KRC	SCALE		DATE	08/02/17
DRAWN BY	JRH	(H) 1"= 50'		SHEET	1 OF 19
CHECKED BY		(V) 1"= N/A		JOB NO.	1199.00

FIGURE 2 - Foothills Farm

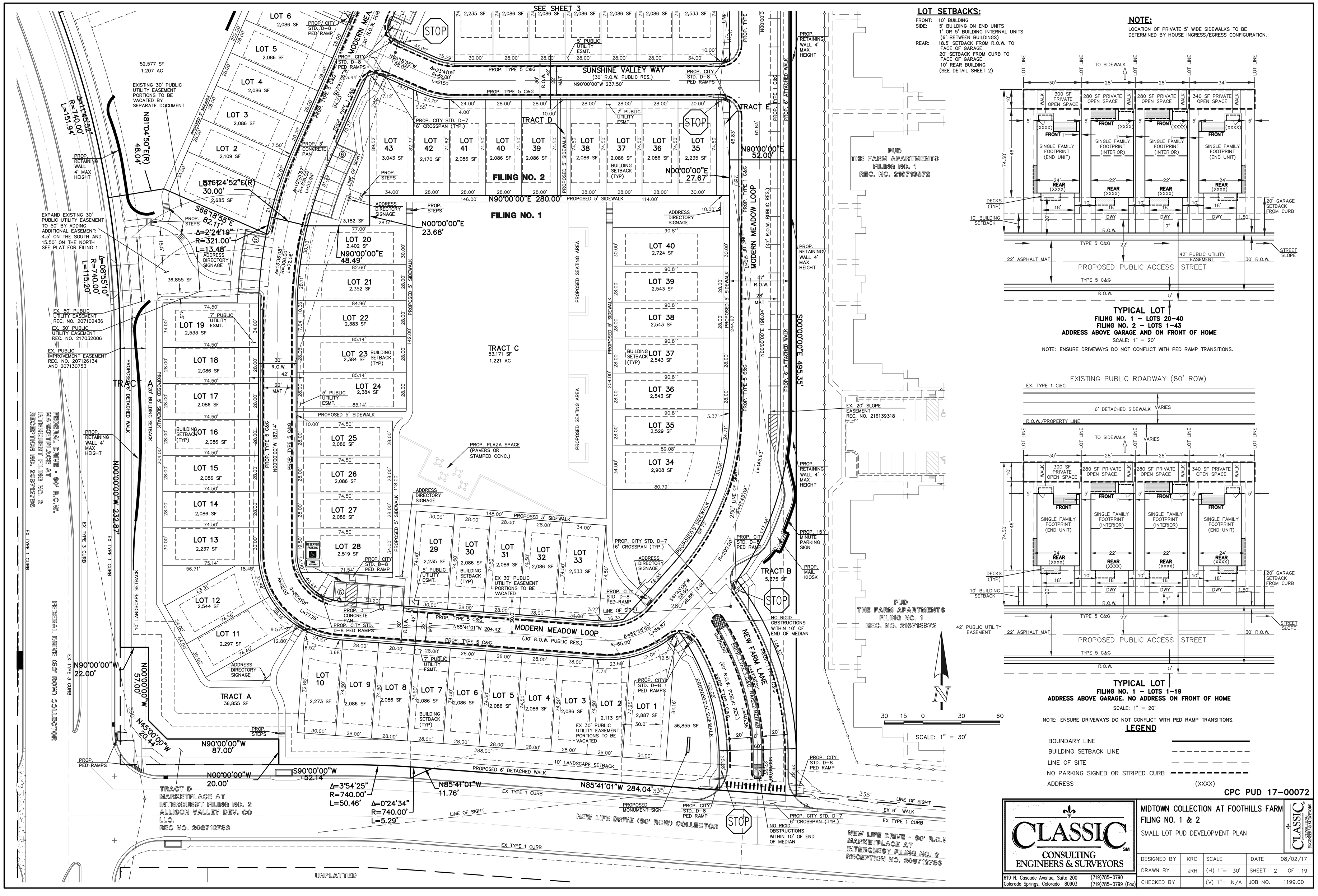

LOT SETBACKS:

FRONT: 10' BUILDING
SIDE: 5' BUILDING ON END UNITS
1' OR 5' BUILDING INTERNAL UNITS
(6' BETWEEN BUILDINGS)
REAR: 18.5' SETBACK FROM R.O.W. TO FACE OF GARAGE
20' SETBACK FROM CURB TO FACE OF GARAGE
10' REAR BUILDING
(SEE DETAIL SHEET 2)

NOTE:

LOCATION OF PRIVATE 5' WIDE SIDEWALKS TO BE DETERMINED BY HOUSE INGRESS/EGRESS CONFIGURATION.

TYPICAL LOT
FILING NO. 1 – LOTS 20–40
FILING NO. 2 – LOTS 1–43
ADDRESS ABOVE GARAGE AND ON FRONT OF HOME
SCALE: 1" = 20'

NOTE: ENSURE DRIVEWAYS DO NOT CONFLICT WITH PED RAMP TRANSITIONS.

TYPICAL LOT
FILING NO. 1 – LOTS 1–19
ADDRESS ABOVE GARAGE. NO ADDRESS ON FRONT OF HOME
SCALE: 1" = 20'

NOTE: ENSURE DRIVEWAYS DO NOT CONFLICT WITH PED RAMP TRANSITIONS.

LEGEND

BOUNDARY LINE
BUILDING SETBACK LINE
LINE OF SITE
NO PARKING SIGNED OR STRIPED CURB
ADDRESS (XXXX)

CPC PUD 17–00072

CLASSIC CONSULTING ENGINEERS & SURVEYORS
619 N. Cascade Avenue, Suite 200
Colorado Springs, Colorado 80903
(719)785–0790
(719)785–0799 (Fax)

MIDTOWN COLLECTION AT FOOTHILLS FARM
FILING NO. 1 & 2
SMALL LOT PUD DEVELOPMENT PLAN

DESIGNED BY	KRC	SCALE		DATE	08/02/17
DRAWN BY	JRH	(H) 1"= 30'		SHEET 2	OF 19
CHECKED BY		(V) 1"= N/A		JOB NO.	1199.00

FIGURE 2 - Foothills Farm

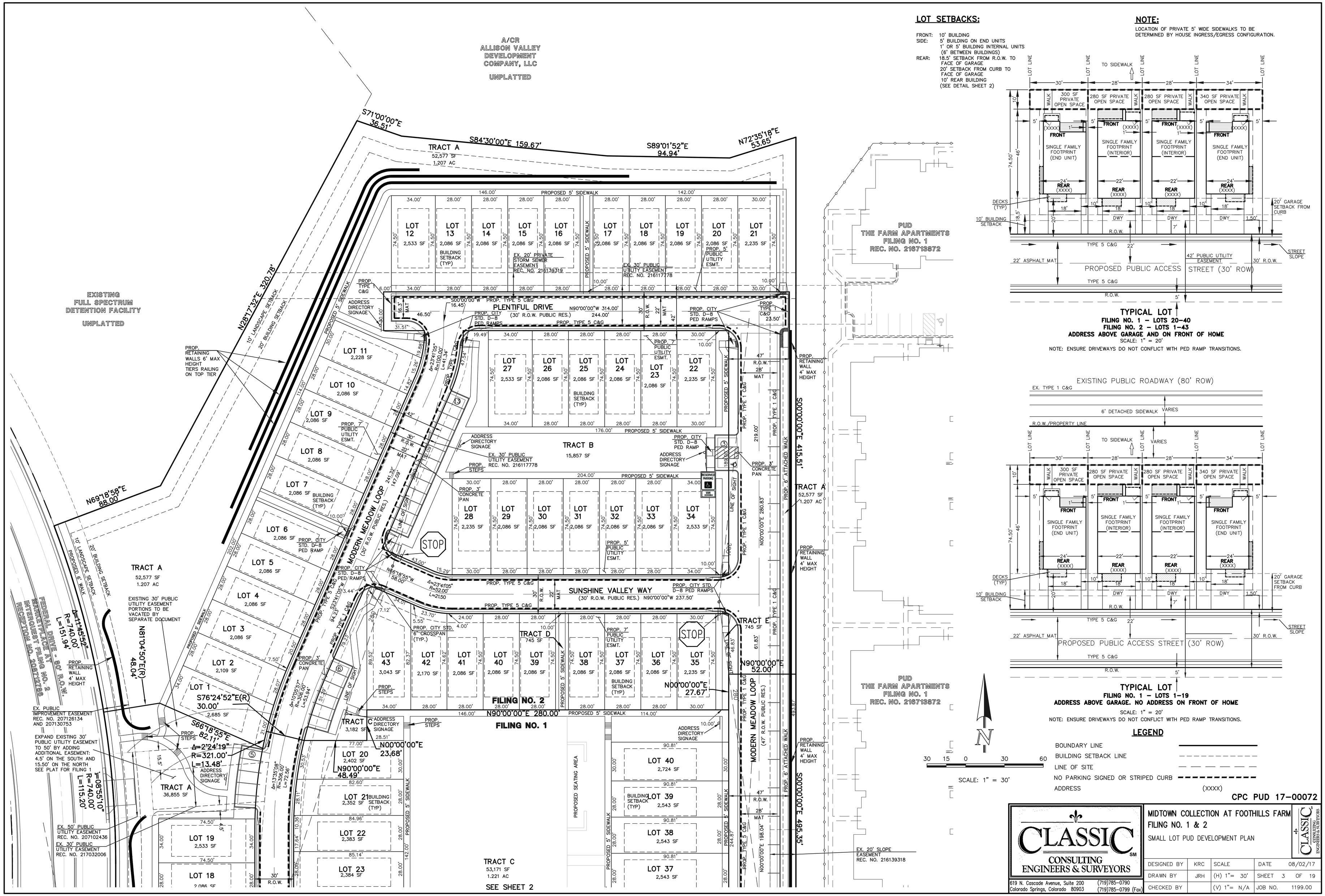

FIGURE 2 - Foothills Farm