ROYAL PINE APARTMENTS

ROYAL PINE APARTMENTS, FILING 1
4150-4180 ROYAL PINE DRIVE
COLORADO SPRINGS, COLORADO
DEVELOPMENT PLAN
MAJOR MODIFICATION

LEGAL DESCRIPTION:

LOTS 1, 2, 3 AND 4, THE MARKET AT PINE CREEK FILING NO. 6, COUNTY OF EL PASO, STATE OF COLORADO.

NOTE: THE ABOVE LEGAL DESCRIPTION IS AS DESCRIBED IN THE CHICAGO TITLE INSURANCE COMPANY ALTA COMMITMENT, ORDER NUMBER ABC55109736–2, WITH AN EFFECTIVE DATE OF 03/07/2023 AT 5:00 P.M.

TO BE REPLATTED INTO A SINGLE LOT.

NOTES:

1. THE EXISTING BOUNDARY INFORMATION TAKEN FROM THE ALTA SURVEY PREPARED BY DREXEL, BARRELL & CO. DATE ISSUED 5/04/23.
2. NO VARIANCES WILL BE ALLOWED.
3. ALL LIGHTING FIXTURES SHALL BE FULL CUT–OFF OR HAVE SHIELDING TO REDUCE OFF–SITE LIGHTING IMPACTS ONTO ADJACENT PROPERTIES AND ROADWAYS.
4. THE GENERAL DRAINAGE PATTERNS ARE TO THE WESTERLY DIRECTION.
5. EXISTING WATER QUALITY POND WQ1 LOCATED ON THE SOUTHWEST CORNER OF THE PROPERTY, AND WQ2 LOCATED WEST OF THE PROPERTY AS DESIGNED IN FINAL DRAINAGE REPORT FOR MARKET AT PINE CREEK FILING NO. 1 BY GALLOWAY, ROMERO & ASSOCIATES, REVISED APRIL 5, 2007 AND AN MDDP "AMENDMENT NO. 3 TO PINE CREEK DRAINAGE BASIN PLANNING STUDY AND MASTER DEVELOPMENT DRAINAGE PLAN FOR THE PINE CREEK AND CORDERA NEIGHBORHOODS (PORTIONS CONTRIBUTING TO PINE CREEK)", BY JR ENGINEERING, APPROVED MARCH 14, 2003.
6. THIS DEVELOPMENT IS PROPOSED IN ONE PHASE CONSTRUCTION. NO FUTURE EXPANSION IS ANTICIPATED.
7. LANDSCAPE IMPROVEMENTS AND MAINTENANCE SHALL BE THE RESPONSIBILITY OF OWNER, AND/OR THEIR ASSIGNS.
8. ALL "STOP SIGNS" WILL BE INSTALLED BY THE DEVELOPER AT THE LOCATIONS SHOWN ON THE DEVELOPMENT PLANS TO MEET MUTCD STANDARDS. CONTACT TRAFFIC ENGINEERING, SIGNS AND MARKINGS AT 719–385–6720 FOR ASSISTANCE.
9. ALL PROPOSED SIGNAGE MUST BE APPROVED BY THE LAPLATA COMMUNITY DESIGN REVIEW BOARD.
10. ALL DRIVEWAYS AND PARKING SPACES TO BE ASPHALT UNLESS OTHERWISE SHOWN.
11. ALL INTERNAL DRIVEWAYS, PARKING SPACES AND ISLANDS ARE TO BE TYPE 3 CURB AND GUTTER.
12. THERE SHALL BE NO DIRECT VEHICULAR ACCESS TO OR FROM POWERS BOULEVARD OR UNION BOULEVARD.
13. A SEPARATE SIGN PERMIT IS REQUIRED. CONTACT DEVELOPMENT REVIEW ENTERPRISES AT 2880 INTERNATIONAL CIRCLE FOR A SIGN PLAN APPLICATION.
14. ALL PRIVATE TO PUBLIC STORM SEWER CONNECTIONS MUST BE INSPECTED BY AN ENGINEERING DEVELOPMENT REVIEW INSPECTOR.
15. HANDRAIL IS REQUIRED AT THE TOP OF ALL RETAINING WALLS OVER 30" IN HEIGHT.
16. MAIL KIOSK IS TO BE LOCATED WITHIN THE CLUBHOUSE.
17. THE ARTICLES OF INCORPORATION FOR BRIARGATE CROSSING COMMERCIAL OWNERS ASSOCIATION, INC. ARE FILED UNDER ID NUMBER 20051107903 WITH COLORADO SECRETARY OF STATE. THE AREA INCLUDED IN THIS PLAN SHALL BE SUBJECT TO THE DECLARATION OF COVENANTS, CONDITIONS, AND RESTRICTIONS FOR BRIARGATE CROSSING COMMERCIAL RECORDED UNDER RECEPTION NO. 205035240 AND THE FIRST AMENDMENT RECORDED UNDER RECEPTION NO. 209007216.
18. THE AREA INCLUDED IN THIS PLAN SHALL BE SUBJECT TO THE DECLARATION OF COVENANTS, CONDITIONS, AND RESTRICTIONS FOR THE MARKET OF PINE CREEK JOINT COVENANTS AND EASEMENT AGREEMENT RECORDED FEBRUARY 25, 2008 UNDER RECEPTION No. 208021174.
19. ALL EXISTING CURB, GUTTER, SIDEWALK AND DRIVEWAY APRONS POSING A SAFETY HAZARD, DAMAGED, EXHIBITING EXCESSIVE DETERIORATION OR NOT MEETING CURRENT CITY ENGINEERING STANDARDS ADJACENT TO THE SITE WILL NEED TO BE REMOVED AND REPLACED PRIOR TO ISSUING THE CERTIFICATE OF OCCUPANCY (C.O.). AN ON–SITE MEETING CAN BE SET UP WITH THE ENGINEERING DEVELOPMENT REVIEW INSPECTOR TO DETERMINE WHAT, IF ANY, IMPROVEMENTS ARE REQUIRED. THE INSPECTOR CAN BE REACHED AT 719–385–5977.
20. ALL STREET TREES AND STREETSCAPE IMPROVEMENTS LOCATED IN THE ROW WILL MAINTAINED BY THE ABUTTING PROPERTY OWNER.
21. A PUBLIC ACCESS EASEMENT(S) IS IN EFFECT PER RECEPTION NO.S 207712594, 207712706 & 208021174.
22. AN AVIGATION EASEMENT AFFECTING THE SUBJECT PROPERTY AND DEVELOPMENT WILL BE ESTABLISHED WITH THE REPLAT OF THIS PROPERTY. THIS EASEMENT WILL BE SUBJECT TO THE TERMS AND CONDITIONS AS SPECIFIED IN THE INSTRUMENT RECORDED UNDER RECEPTION NO. 217069667 OF THE RECORDS OF EL PASO COUNTY, COLORADO.
23. THIS PROPERTY MAY BE IMPACTED BY NOISE CAUSED BY AIRCRAFT OPERATING INTO AND OUT OF THE COLORADO SPRINGS MUNICIPAL AIRPORT. THE BUYER SHOULD FAMILIARIZE HIMSELF/HERSELF WITH THIS POTENTIALITY AND RAMIFICATIONS THEREOF.
24. PROPERTY IS SUBJECT TO EASEMENTS AND RIGHTS OF WAY FOR THE PURPOSES SHOWN ON THE RECORD PLAT.
25. ACCESSIBLE ROUTES, INCLUDING RAMPS AND SIDEWALKS, WITHIN THE PUBLIC RIGHT–OF–WAY SHALL BE PER THE CITY'S STANDARD DRAWINGS AND SPECIFICATIONS. CITY'S ENGINEERING DEVELOPMENT REVIEW INSPECTOR WILL HAVE THE FINAL AUTHORITY ON ACCEPTING THE PUBLIC IMPROVEMENTS
26. INSTALLATION OF ELECTRICAL DEVICES IN THE PUBLIC ROW SHALL BE PERFORMED IN ACCORDANCE WITH THE CITY SPECIFICATION SECTION 1001 AND COMPLETE THE COLORADO SPRINGS UTILITIES "ELECTRIC INSPECTION IN THE RIGHT–OF–WAY CERTIFICATE" IN ACCORDANCE WITH UTILITIES' REQUIREMENTS FOR ELECTRIFICATION. THE CERTIFICATE SHALL ALSO BE PROVIDED TO THE CITY INSPECTOR.

ADA DESIGN PROFESSIONAL STANDARDS

THE PARTIES RESPONSIBLE FOR THIS PLAN HAVE FAMILIARIZED THEMSELVES WITH ALL CURRENT ACCESSIBILITY CRITERIA AND SPECIFICATIONS AND THE PROPOSED PLAN REFLECTS ALL SITE ELEMENTS REQUIRED BY THE APPLICABLE ADA DESIGN STANDARD AND GUIDELINES AS PUBLISHED BY THE UNITED STATES DEPARTMENT OF JUSTICE. APPROVAL OF THIS PLAN BY THE CITY OF COLORADO SPRINGS DOES NOT ASSURE COMPLIANCE WITH THE ADA OR ANY OTHER FEDERAL OR STATE ACCESSIBILITY LAWS OR ANY REGULATIONS OR GUIDELINES ENACTED OR PROMULGATED UNDER OR WITH RESPECT TO SUCH LAWS. SOLE RESPONSIBILITY FOR COMPLIANCE WITH FEDERAL AND STATE ACCESSIBILITY LAWS LIES WITH THE PROPERTY OWNER.

FLOODPLAIN STATEMENT

THIS PROPERTY IS NOT LOCATED WITHIN A FLOOD HAZARD AREA AS INDICATED ON THE NFIP FLOOD INSURANCE RATE MAP FOR EL PASO COUNTY, PANEL NUMBER 08041 C 0507 G, DATED DECEMBER 7, 2018.

SITE BENCHMARK

2" ALUMINUM CAP IN THE NORTHEASTERLY CORNER OF THE SUBJECT PROPERTY STAMPED: "CP 300".
ELEVATION: 6991.471 (NAVD 88).

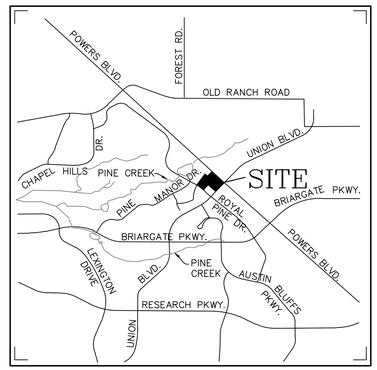

VICINITY MAP
NOT TO SCALE

CITY WIDE DEVELOPMENT IMPACT – POLICE AND FIRE FEES/HOUSING/BUILDING DATA

RESIDENTIAL

HOUSING TYPE	EXISTING USE – No. OF UNITS	NEW USE – No. OF UNITS
50 UNITS OR MORE IN RESIDENTIAL STRUCTURE	0	232

NON–RESIDENTIAL

BUILDING TYPE	TOTAL EXISTING USE – Sq. Ft.	TOTAL NEW USE – Sq. Ft.
CLUBHOUSE	0	4,737

OVERALL PARK LAND DEDICATION/FEE REQUIREMENTS *

HOUSING TYPE	No. OF UNITS	ACRES OF DEDICATION PER UNIT (NEIGHBORHOOD)	ACRES OF DEDICATION PER UNIT (COMMUNITY)	TOTAL ACRES OF LAND DEDICATION REQUIRED (NEIGHBORHOOD)	TOTAL ACRES OF LAND DEDICATION REQUIRED (COMMUNITY)
50 UNITS OR MORE IN RESIDENTIAL STRUCTURE	232	0.0041	0.0049	0.951	1.137

* THE LISTED FEES ARE THE 2021 PLDO ORDINANCE BASE RATE. ADDITIONAL FEES IN LIEU WILL BE ACCESSED WITH PLDO FEES IN LIEU AND ARE SUBJECT TO CHANGE.

THIS RESIDENTIAL USE IS APPLICABLE TO THE PARKLAND DEDICATION ORDINANCE AND THE OBLIGATION WILL BE MET BY FEES IN LIEU OF LAND DEDICATION, TO BE PAID AT TIME OF BUILDING PERMIT.

DEVELOPMENT PLAN HISTORY:

FILE #	AMENDMENT TYPE	DESCRIPTION	UPDATES	APPROVAL DATE
CPC DP 05–00223	MAJOR MODIFICATION	DEVELOPMENT PLAN		
DEPN–23–0141	MAJOR MODIFICATION	DEVELOPMENT PLAN		

SHEET INDEX

1 COVER SHEET
2 DEVELOPMENT SITE PLAN
3 FIRE AND ADA ACCESS PLAN
4 PRELIMINARY GRADING PLAN
5 PRELIMINARY UTILITY & PUBLIC FACILITY PLAN
6 SITE DETAIL SHEET
7 SITE LIGHTING PHOTOMETRIC
8 LIGHTING DETAILS
9 ELEVATIONS – BUILDING 1
10 ELEVATIONS – BUILDING 2 & 3
11 ELEVATIONS – CLUBHOUSE BUILDING
12 ELEVATIONS – SITE ELEMENTS
13 PLANS – BUILDING 1
14 PLANS – BUILDINGS 2 & 3
15 PLANS – CLUBHOUSE
16 MATERIAL BOARD
17 OVERALL LANDSCAPE PLAN
18 GREEN SPACE & HYDROZONE DIAGRAM
19 FINAL LANDSCAPE PLAN–AREA A
20 FINAL LANDSCAPE PLAN–AREA B
21 FINAL LANDSCAPE PLAN–AREA C
22 PLANTING NOTES
23 PLANTING DETAILS
24 OVERALL IRRIGATION PLAN
25 IRRIGATION PLAN AREA A
26 IRRIGATION PLAN AREA B
27 IRRIGATION PLAN AREA C
28 IRRIGATION NOTES AND DETAILS
29 IRRIGATION NOTES AND DETAILS
30 IRRIGATION NOTES AND DETAILS

SITE/BUILDING DATA

OWNER:	BG DEVELOPMENT LLC 3033 E 1ST AVE. SUITE 203, DENVER CO, 80206
DEVELOPER:	DBG PROPERTIES LLC 2164 SW PARK PLACE, PORTLAND OR 97205
TAX SCHEDULE NUMBERS:	62263–04–034 62263–04–035 62263–04–036 62263–04–037
DEVELOPMENT PLAN/LOT AREA:	342,775 S.F. (7.87 AC)
ZONING: (EXISTING)	MX–M (MIXED–USED MEDIUM SCALE)
MASTER PLAN:	BRIARGATE MASTER PLAN 07–00061–A5MJ16 APPROVED APRIL 11, 2017
LAND USE:	MULTI–FAMILY DWELLING
DRAINAGE BASIN:	PINE CREEK
BUILDING CONSTRUCTION TYPE:	VA, SPRINKLED
BUILDING FOOTPRINT:	(CLUBHOUSE) 4,737, (BLDG 2) 16,947, (BLDGS 1A&1B) 21,127 SF
TOTAL BUILDING FOOTPRINT:	63,938 SF
DENSITY:	29.2 UNITS/ACRE

BUILDING HEIGHTS	ALLOWED (MX–M)	50'
	PROPOSED APARTMENTS	44'–2"
	PROPOSED CLUBHOUSE	20'–8"
BUILDING SETBACKS	FRONT (ROYAL PINE)	20'
	SIDE (INTERIOR)	20'
	SIDE (UNION BLVD)	30'
	REAR (POWERS BLVD)	15'
LANDSCAPE SETBACK:	FRONT (ROYAL PINE)	15'
	SIDE (UNION BLVD)	25'
	SIDE	15'
	REAR (POWERS BLVD)	25'
MAXIMUM LOT COVERAGE ALLOWED (BUILDING)		40%

LOT COVERAGE:		
PROPOSED BUILDING(S)	63,938 SF	18.7%
PROPOSED PAVING	135,352 SF	39.4%
PROPOSED SIDEWALK	23,099 SF	6.7%
PROPOSED LANDSCAPED AREA	120,386 SF	35.2%
TOTAL IMPERVIOUS COVERAGE	222,389 SF	64.8%
PROPOSED ACTIVE GREEN SPACE	34,657 SF	10%
PROPOSED NON–ACTIVE GREEN SPACE	18,207 SF	5%

OPEN SPACE PER BEDROOM	
384 BEDROOMS x 200 SF REQUIRED	76,800 SF REQUIRED 123,744 SF PROVIDED

PARKING SPACES REQUIRED:	
1 BED – 1.0 SP x 124 UNITS	124 SPACES
2 BED – 1.5 SP x 64 UNITS	96 SPACES
3 BED – 2.0 SP x 44 UNITS	88 SPACES
TOTAL REQUIRED SPACES	308 SPACES

PARKING SPACES PROVIDED:	
ON–SITE STANDARD SPACES	323 SPACES
HANDICAP SPACES	16 SPACES
TOTAL SPACES	339 SPACES
BICYCLE SPACES	8 SPACES

APPROXIMATE SCHEDULE OF DEVELOPMENT:	BEGIN SPRING 2024 COMPLETE FALL 2025

DEPN–23–0141

PREPARED BY:

DREXEL, BARRELL & CO.
Engineers • Surveyors
101 S. SAHWATCH ST. #100
COLORADO SPGS, COLORADO 80903
CONTACT: TIM D. McCONNELL, P.E.
(719)260-0887
COLORADO SPRINGS • LAFAYETTE

CLIENT:

DBG PROPERTIES, LLC
2164 SW PARK PLACE
PORTLAND, OR 97205
(503) 956–4355
CONTACT: ERIC GRODAHL

DEVELOPMENT PLANS FOR
ROYAL PINE APARTMENTS
LOTS 1–4 THE MARKETS AT PINE CREEK, FILING 6
4150–4180 ROYAL PINE DRIVE
COLORADO SPRINGS, COLORADO

ISSUE	DATE
INITIAL ISSUE	6–30–23
LATEST ISSUE	12–11–23

DESIGNED BY:	TDM
DRAWN BY:	GES
CHECKED BY:	TDM
FILE NAME:	21754–01CV01

PREPARED UNDER MY DIRECT SUPERVISION FOR AND ON BEHALF OF DREXEL, BARRELL & CO.

DRAWING SCALE:
HORIZONTAL: N/A
VERTICAL: N/A

COVER SHEET

PROJECT NO. 21754–01CSCV

DRAWING NO.

CV1

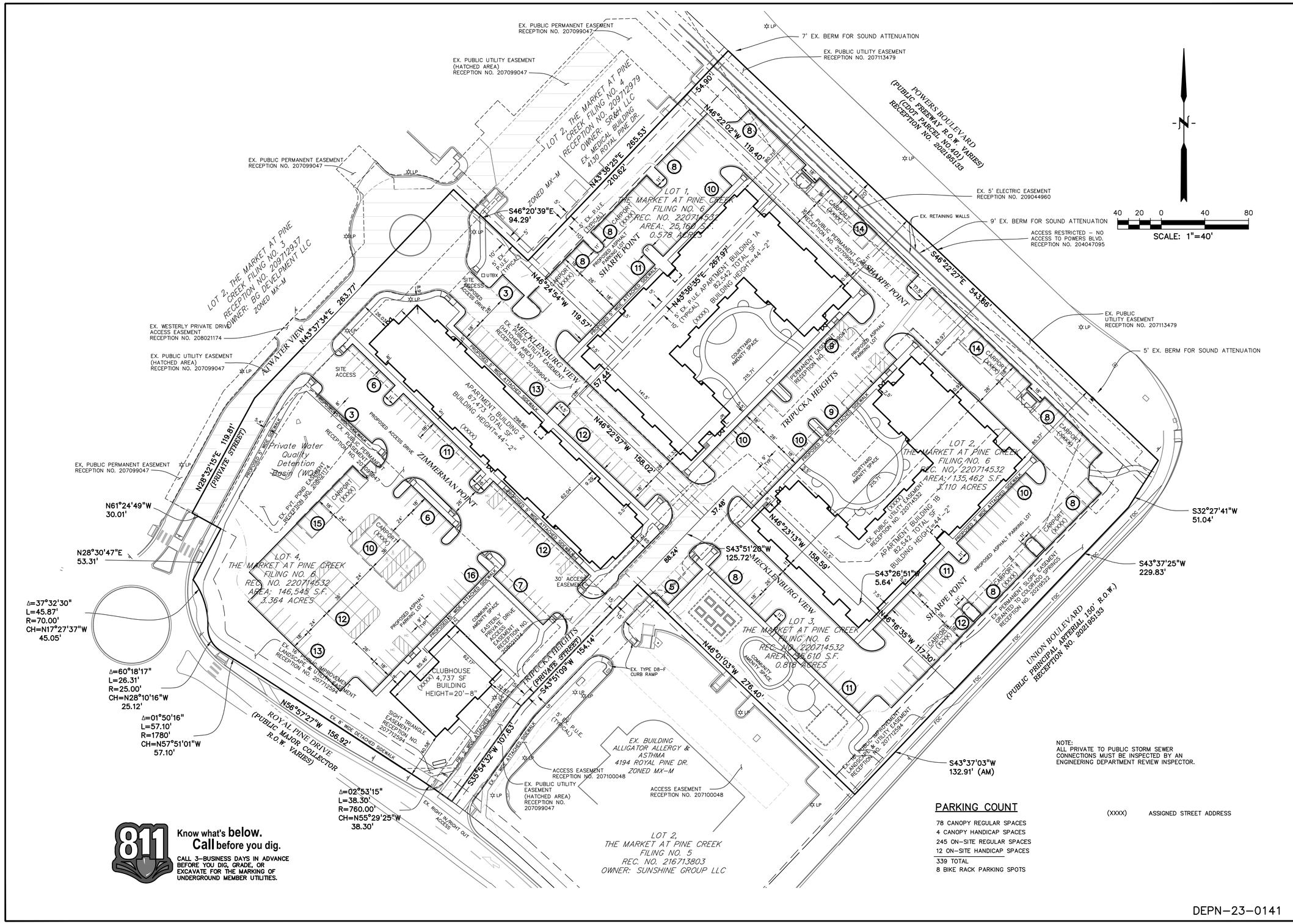

Know what's **below.**
Call before you dig.

CALL 3-BUSINESS DAYS IN ADVANCE BEFORE YOU DIG, GRADE, OR EXCAVATE FOR THE MARKING OF UNDERGROUND MEMBER UTILITIES.

PARKING COUNT

78 CANOPY REGULAR SPACES
4 CANOPY HANDICAP SPACES
245 ON-SITE REGULAR SPACES
12 ON-SITE HANDICAP SPACES
339 TOTAL
8 BIKE RACK PARKING SPOTS

(XXXX) ASSIGNED STREET ADDRESS

NOTE:
ALL PRIVATE TO PUBLIC STORM SEWER CONNECTIONS MUST BE INSPECTED BY AN ENGINEERING DEPARTMENT REVIEW INSPECTOR.

DEPN-23-0141

PREPARED BY:

DREXEL, BARRELL & CO.
Engineers • Surveyors
101 S. SAHWATCH ST. #100
COLORADO SPGS, COLORADO 80903
CONTACT: TIM D. McCONNELL, P.E.
(719)260-0887
COLORADO SPRINGS • LAFAYETTE

CLIENT:

DBG PROPERTIES, LLC
2164 SW PARK PLACE
PORTLAND, OR 97205
(503) 956-4355
CONTACT: ERIC GRODAHL

DEVELOPMENT PLANS FOR
ROYAL PINE APARTMENTS
LOTS 1-4 THE MARKETS AT PINE CREEK, FILING 6
4150-4180 ROYAL PINE DRIVE
COLORADO SPRINGS, COLORADO

ISSUE	DATE
INITIAL ISSUE	6-30-23
LATEST ISSUE	12-11-23

DESIGNED BY:	TDM
DRAWN BY:	GES
CHECKED BY:	TDM
FILE NAME:	21754-01SP01

PREPARED UNDER MY DIRECT SUPERVISION FOR AND ON BEHALF OF DREXEL, BARRELL & CO.

DRAWING SCALE:
HORIZONTAL: 1" = 40'
VERTICAL: N/A

SITE PLAN

PROJECT NO. 21754-01CSCV
DRAWING NO.

SP01

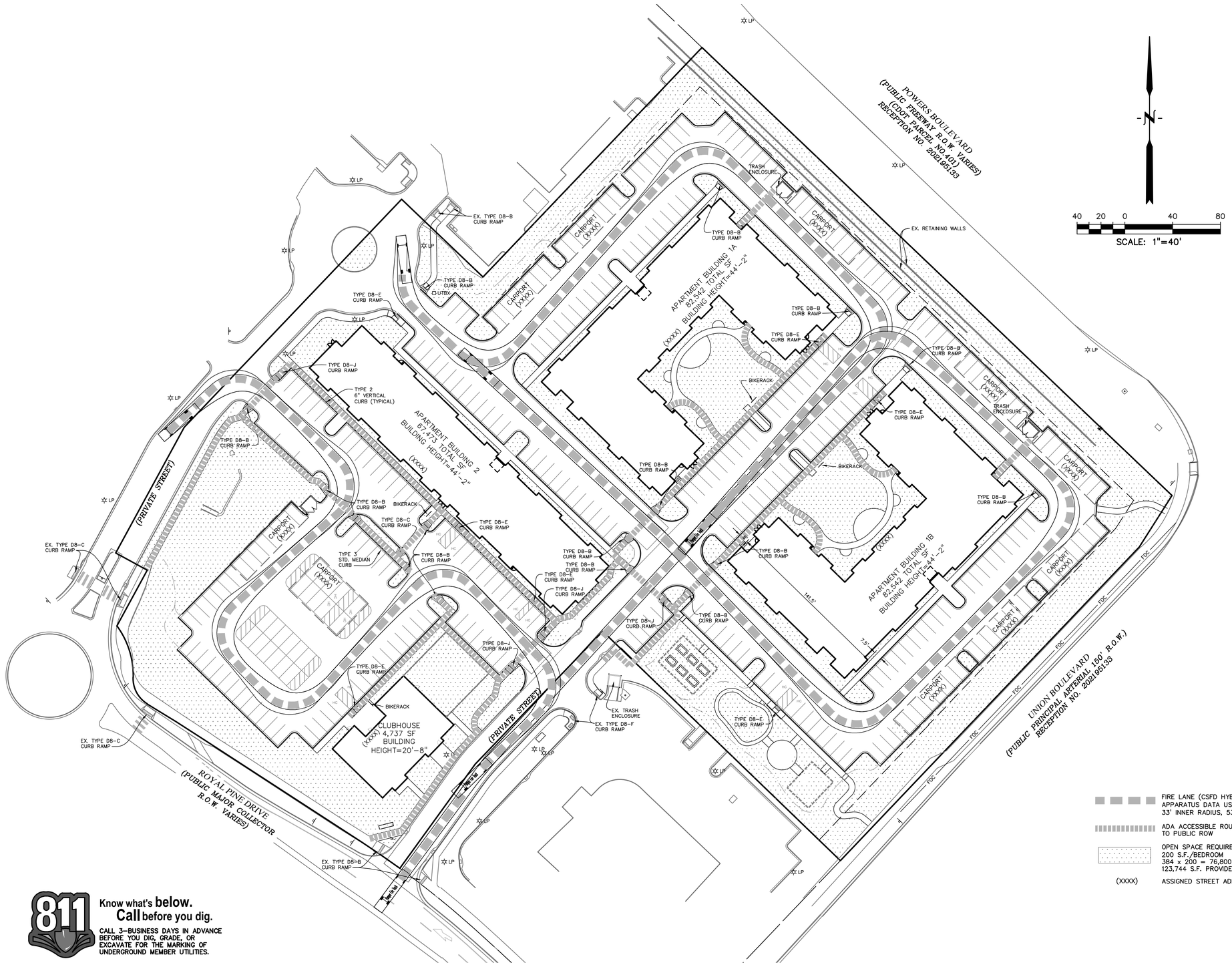

FIRE LANE (CSFD HYBRID TRUCK APPARATUS DATA USED) 33' INNER RADIUS, 53' OUTER RADIUS

ADA ACCESSIBLE ROUTE TO PUBLIC ROW

OPEN SPACE REQUIRED
200 S.F./BEDROOM
384 x 200 = 76,800 S.F.
123,744 S.F. PROVIDED

(XXXX) ASSIGNED STREET ADDRESS

811 Know what's **below.** **Call** before you dig.

CALL 3-BUSINESS DAYS IN ADVANCE BEFORE YOU DIG, GRADE, OR EXCAVATE FOR THE MARKING OF UNDERGROUND MEMBER UTILITIES.

DEPN-23-0141

PREPARED BY:

DREXEL, BARRELL & CO.
Engineers • Surveyors
101 S. SAHWATCH ST. #100
COLORADO SPGS, COLORADO 80903
CONTACT: TIM D. McCONNELL, P.E.
(719)260-0887
COLORADO SPRINGS • LAFAYETTE

CLIENT:

DBG PROPERTIES, LLC
2164 SW PARK PLACE
PORTLAND, OR 97205
(503) 956-4355
CONTACT: ERIC GRODAHL

DEVELOPMENT PLANS FOR
ROYAL PINE APARTMENTS
LOTS 1-4 THE MARKETS AT PINE CREEK, FILING 6
4150-4180 ROYAL PINE DRIVE
COLORADO SPRINGS, COLORADO

ISSUE	DATE
INITIAL ISSUE	6-30-23
LATEST ISSUE	12-11-23

DESIGNED BY:	TDM
DRAWN BY:	GES
CHECKED BY:	TDM
FILE NAME:	21754-01SP01

PREPARED UNDER MY DIRECT SUPERVISION FOR AND ON BEHALF OF DREXEL, BARRELL & CO.

DRAWING SCALE:
HORIZONTAL: 1" = 40'
VERTICAL: N/A

FIRE AND ADA ACCESS PLAN

PROJECT NO. 21754-01CSCV

DRAWING NO.

SP02

SHEET: 3 OF 30

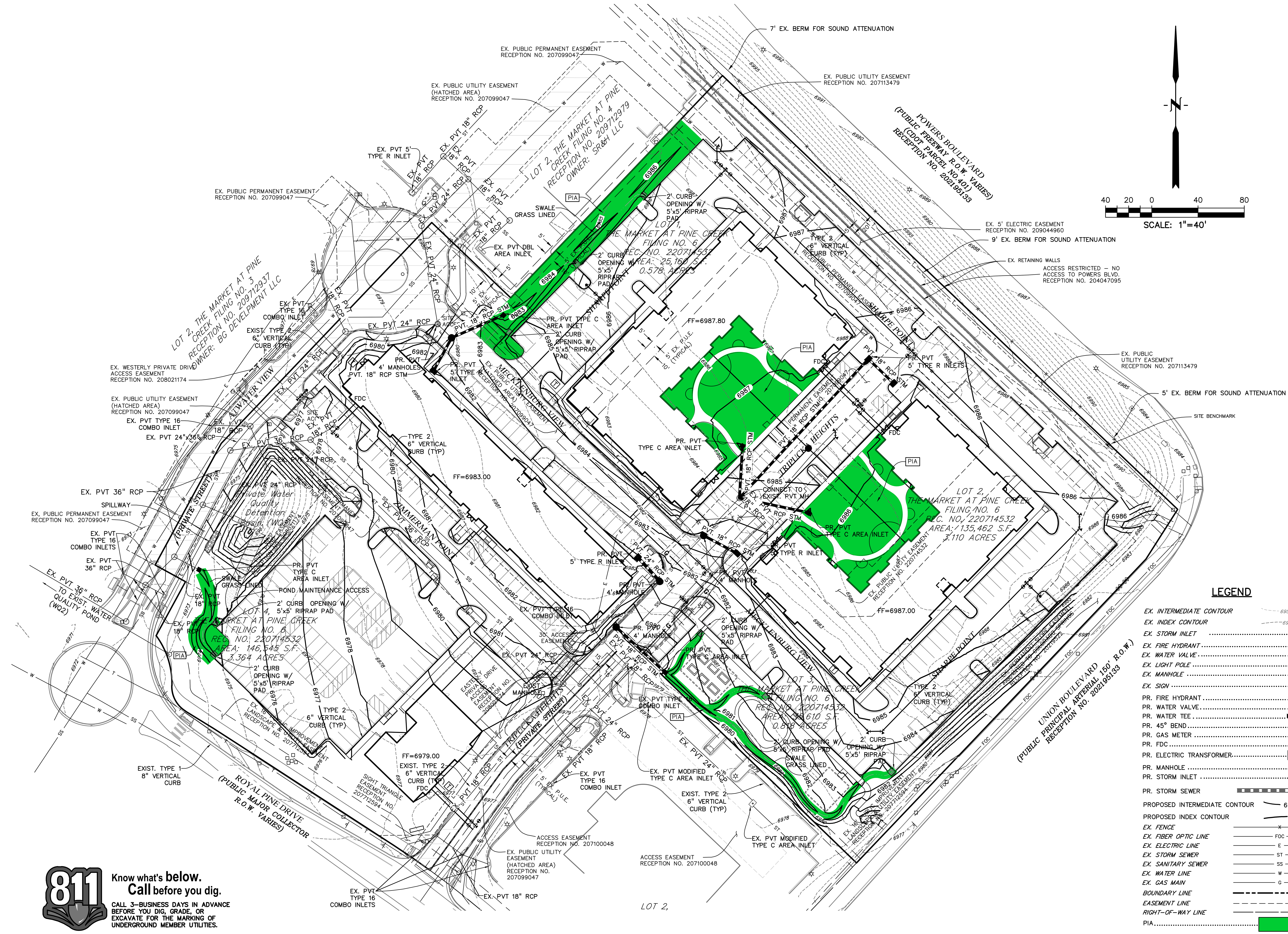

Know what's below. Call before you dig.
CALL 3–BUSINESS DAYS IN ADVANCE BEFORE YOU DIG, GRADE, OR EXCAVATE FOR THE MARKING OF UNDERGROUND MEMBER UTILITIES.

LEGEND

EX. INTERMEDIATE CONTOUR	6954
EX. INDEX CONTOUR	6955
EX. STORM INLET	
EX. FIRE HYDRANT	FH
EX. WATER VALVE	WV
EX. LIGHT POLE	
EX. MANHOLE	
EX. SIGN	
PR. FIRE HYDRANT	
PR. WATER VALVE	
PR. WATER TEE	
PR. 45° BEND	
PR. GAS METER	G
PR. FDC	FDC
PR. ELECTRIC TRANSFORMER	T
PR. MANHOLE	
PR. STORM INLET	
PR. STORM SEWER	
PROPOSED INTERMEDIATE CONTOUR	6954
PROPOSED INDEX CONTOUR	6955
EX. FENCE	X
EX. FIBER OPTIC LINE	FOC
EX. ELECTRIC LINE	E
EX. STORM SEWER	ST
EX. SANITARY SEWER	SS
EX. WATER LINE	W
EX. GAS MAIN	G
BOUNDARY LINE	
EASEMENT LINE	
RIGHT-OF-WAY LINE	
PIA	

DEPN–23–0141

PREPARED BY:

DREXEL, BARRELL & CO.
Engineers • Surveyors
101 S. SAHWATCH ST. #100
COLORADO SPGS, COLORADO 80903
CONTACT: TIM D. McCONNELL, P.E.
(719)260-0887
COLORADO SPRINGS • LAFAYETTE

CLIENT:

DBG PROPERTIES, LLC
2164 SW PARK PLACE
PORTLAND, OR 97205
(503) 956–4355
CONTACT: ERIC GRODAHL

DEVELOPMENT PLANS FOR
ROYAL PINE APARTMENTS
LOTS 1–4 THE MARKETS AT PINE CREEK, FILING 6
4150–4180 ROYAL PINE DRIVE
COLORADO SPRINGS, COLORADO

ISSUE	DATE
INITIAL ISSUE	6–30–23
LATEST ISSUE	12–11–23

DESIGNED BY:	TDM
DRAWN BY:	GES
CHECKED BY:	TDM
FILE NAME:	21754–01GP01

PREPARED UNDER MY DIRECT SUPERVISION FOR AND ON BEHALF OF DREXEL, BARRELL & CO.

DRAWING SCALE:
HORIZONTAL: 1" = 40'
VERTICAL: N/A

PRELIMINARY GRADING PLAN

PROJECT NO. 21754–01CSCV
DRAWING NO.

GP01

GENERAL NOTES FOR PRELIMINARY UTILITY PLANS

PROPERTY OWNER(S) ACKNOWLEDGE AND AGREE TO THE FOLLOWING UPON APPROVAL OF PRELIMINARY UTILITY PLAN:

1. COLORADO SPRINGS UTILITIES (SPRINGS UTILITIES) SHALL MAKE THE FINAL DETERMINATION OF THE LOCATION OF ALL WATER, WASTEWATER, ELECTRIC AND GAS FACILITIES, WHICH MAY NOT BE THE SAME LOCATION AS SHOWN ON THIS PRELIMINARY UTILITY PLAN.

2. PROPERTY OWNER(S) ("OWNER") ACKNOWLEDGES THAT THE CONNECTION AND/OR EXTENSION OF UTILITY SERVICES TO THE PROPERTY IDENTIFIED IN THIS PRELIMINARY UTILITY PLAN ("PROPERTY") SHALL BE IN ACCORD WITH ALL APPLICABLE CODES AND REGULATIONS, SPRINGS UTILITIES LINE EXTENSION & SERVICE STANDARDS ("STANDARDS"), TARIFFS, COLORADO SPRINGS CITY CODE, RESOLUTIONS, AND POLICIES, AND PIKES PEAK REGIONAL BUILDING DEPARTMENT CODES, IN EFFECT AT THE TIME OF UTILITY SERVICE CONNECTION AND/OR EXTENSION.

3. OWNER ACKNOWLEDGES RESPONSIBILITY FOR THE COSTS OF EXTENSIONS OR UTILITY SYSTEM IMPROVEMENTS THAT SPRINGS UTILITIES DETERMINES NECESSARY TO PROVIDE UTILITY SERVICES TO THE PROPERTY OR TO ENSURE TIMELY DEVELOPMENT OF INTEGRATED UTILITY SYSTEMS SERVING THE PROPERTY AND AREAS OUTSIDE THE PROPERTY (INCLUDING THE COSTS TO DESIGN AND INSTALL WATER SYSTEMS, WASTEWATER COLLECTION SYSTEMS, AND ANY GAS OR ELECTRIC LINES TO AND WITHIN THE PROPERTY). OWNER MAY BE ELIGIBLE FOR A COST RECOVERY AGREEMENT AS PROVIDED IN UTILITIES' RULES AND REGULATIONS.

4. SPRINGS UTILITIES UTILITY SERVICES ARE AVAILABLE ON A "FIRST–COME, FIRST–SERVED" BASIS, AND THEREFORE NO SPECIFIC ALLOCATIONS OR AMOUNTS OF UTILITY SERVICES, FACILITIES, CAPACITIES OR SUPPLIES ARE RESERVED FOR THE OWNER, AND SPRINGS UTILITIES MAKES NO COMMITMENT AS TO THE AVAILABILITY OF ANY UTILITY SERVICE UNTIL SUCH TIME AS AN APPLICATION FOR PERMANENT SERVICE IS APPROVED BY SPRINGS UTILITIES.

5. THE RELOCATION OR ALTERATION OF ANY EXISTING UTILITY FACILITIES WITHIN THE PROPERTY WILL BE AT THE OWNER'S SALE COST AND EXPENSE. IF SPRINGS UTILITIES DETERMINES THAT OWNER'S RELOCATION OR ALTERATION REQUIRES NEW OR UPDATED EASEMENTS, OWNER SHALL CONVEY THOSE EASEMENTS PRIOR TO RELOCATING OR ALTERING THE EXISTING UTILITY FACILITIES.

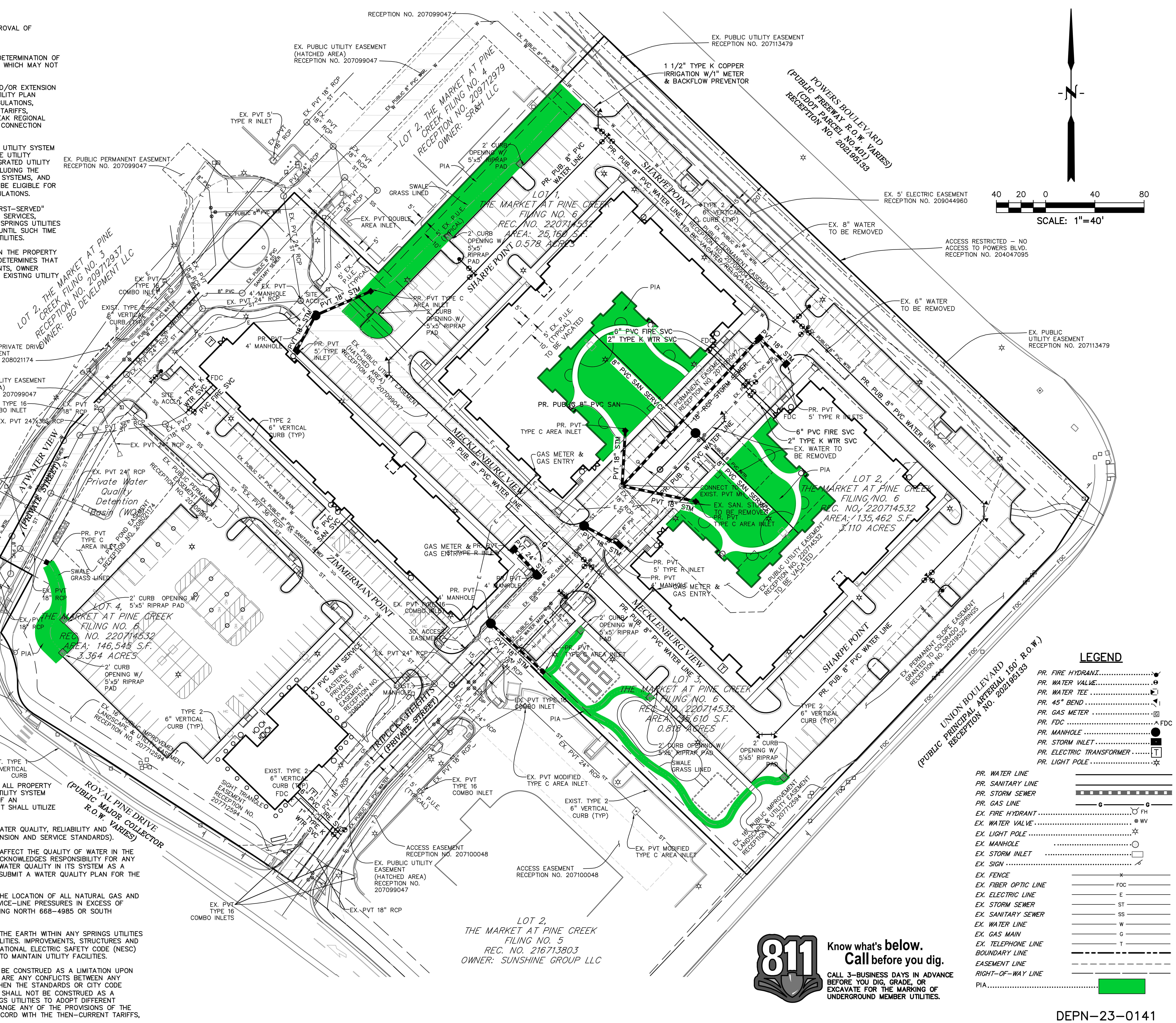

LEGEND

PR. FIRE HYDRANT	
PR. WATER VALVE	
PR. WATER TEE	
PR. 45° BEND	
PR. GAS METER	
PR. FDC	FDC
PR. MANHOLE	
PR. STORM INLET	
PR. ELECTRIC TRANSFORMER	
PR. LIGHT POLE	
PR. WATER LINE	
PR. SANITARY LINE	
PR. STORM SEWER	
PR. GAS LINE	G
EX. FIRE HYDRANT	FH
EX. WATER VALVE	WV
EX. LIGHT POLE	
EX. MANHOLE	
EX. STORM INLET	
EX. SIGN	
EX. FENCE	x
EX. FIBER OPTIC LINE	FOC
EX. ELECTRIC LINE	E
EX. STORM SEWER	ST
EX. SANITARY SEWER	SS
EX. WATER LINE	W
EX. GAS MAIN	G
EX. TELEPHONE LINE	T
BOUNDARY LINE	
EASEMENT LINE	
RIGHT-OF-WAY LINE	
PIA	

6. OWNER SHALL DEDICATE BY PLAT AND/OR CONVEY BY RECORDED DOCUMENT, ALL PROPERTY AND EASEMENTS THAT SPRINGS UTILITIES DETERMINES ARE REQUIRED FOR ALL UTILITY SYSTEM FACILITIES NECESSARY TO SERVE THE PROPERTY OR TO ENSURE DEVELOPMENT OF AN INTEGRATED UTILITY SYSTEM. ALL EASEMENTS GRANTED BY SEPARATE INSTRUMENT SHALL UTILIZE SPRINGS UTILITIES' THEN–CURRENT PERMANENT EASEMENT AGREEMENT FORM.

7. THE WATER SYSTEM FACILITIES MUST MEET SPRINGS UTILITIES CRITERIA FOR WATER QUALITY, RELIABILITY AND PRESSURE, INCLUDING LOOPING REQUIREMENTS (SEE SPRINGS UTILITIES LINE EXTENSION AND SERVICE STANDARDS).

8. OWNER RECOGNIZES THAT THE EXTENSION OF WATER SYSTEM FACILITIES MAY AFFECT THE QUALITY OF WATER IN THE SPRINGS UTILITIES WATER SYSTEM. WHEN WATER QUALITY IS AFFECTED, OWNER ACKNOWLEDGES RESPONSIBILITY FOR ANY COSTS THAT SPRINGS UTILITIES DETERMINES NECESSARY IN ORDER TO MAINTAIN WATER QUALITY IN ITS SYSTEM AS A RESULT OF OWNER'S WATER SYSTEM EXTENSIONS. OWNER MAY BE REQUIRED TO SUBMIT A WATER QUALITY PLAN FOR THE PROJECT

9. OWNER MUST CONTACT SPRINGS UTILITIES FIELD ENGINEERING TO DETERMINE THE LOCATION OF ALL NATURAL GAS AND ELECTRIC METERS AND TRANSFORMERS AND TO SECURE APPROVAL OF GAS–SERVICE–LINE PRESSURES IN EXCESS OF SPRINGS UTILITIES STANDARD GAS SYSTEM PRESSURE. (CONTACT FIELD ENGINEERING NORTH 668–4985 OR SOUTH 668–5564).

10. IT SHALL NOT BE PERMISSIBLE FOR ANY PERSON TO MODIFY THE GRADE OF THE EARTH WITHIN ANY SPRINGS UTILITIES EASEMENT OR RIGHTS OF WAY WITHOUT THE WRITTEN APPROVAL OF SPRINGS UTILITIES. IMPROVEMENTS, STRUCTURES AND TREES SHALL NOT BE LOCATED WITHIN UTILITY EASEMENT, SHALL NOT VIOLATE NATIONAL ELECTRIC SAFETY CODE (NESC) PROVISIONS AND CLEARANCES, AND SHALL NOT IMPAIR ACCESS OR THE ABILITY TO MAINTAIN UTILITY FACILITIES.

11. SPRINGS UTILITIES APPROVAL OF THIS PRELIMINARY UTILITY PLAN SHALL NOT BE CONSTRUED AS A LIMITATION UPON THE AUTHORITY OF SPRINGS UTILITIES TO APPLY ITS STANDARDS; AND IF THERE ARE ANY CONFLICTS BETWEEN ANY APPROVED DRAWINGS AND ANY PROVISION OF STANDARDS OR THE CITY CODE, THEN THE STANDARDS OR CITY CODE SHALL APPLY. SPRINGS UTILITIES' APPROVAL OF THIS PRELIMINARY UTILITY PLAN SHALL NOT BE CONSTRUED AS A LIMITATION UPON THE AUTHORITY OF THE CITY OF COLORADO SPRINGS OR SPRINGS UTILITIES TO ADOPT DIFFERENT ORDINANCES, RULES, REGULATIONS, RESOLUTIONS, POLICIES OR CODES WHICH CHANGE ANY OF THE PROVISIONS OF THE STANDARDS SO LONG AS THESE APPLY TO THE CITY GENERALLY AND ARE IN ACCORD WITH THE THEN–CURRENT TARIFFS, RATES AND POLICIES OF SPRINGS UTILITIES.

811 Know what's below. Call before you dig.
CALL 3–BUSINESS DAYS IN ADVANCE BEFORE YOU DIG, GRADE, OR EXCAVATE FOR THE MARKING OF UNDERGROUND MEMBER UTILITIES.

DEPN–23–0141

PREPARED BY:

DREXEL, BARRELL & CO.
Engineers • Surveyors
101 S. SAHWATCH ST. #100
COLORADO SPGS, COLORADO 80903
CONTACT: TIM D. McCONNELL, P.E.
(719)260-0887
COLORADO SPRINGS • LAFAYETTE

CLIENT:

DBG PROPERTIES, LLC
2164 SW PARK PLACE
PORTLAND, OR 97205
(503) 956–4355
CONTACT: ERIC GRODAHL

DEVELOPMENT PLANS FOR
ROYAL PINE APARTMENTS
LOTS 1–4 THE MARKETS AT PINE CREEK, FILING 6
4150–4180 ROYAL PINE DRIVE
COLORADO SPRINGS, COLORADO

ISSUE	DATE
INITIAL ISSUE	6–30–23
LATEST ISSUE	12–11–23

DESIGNED BY:	TDM
DRAWN BY:	GES
CHECKED BY:	TDM
FILE NAME:	21754–01UT01

PREPARED UNDER MY DIRECT SUPERVISION FOR AND ON BEHALF OF DREXEL, BARRELL & CO.

DRAWING SCALE:
HORIZONTAL: 1" = 40'
VERTICAL: N/A

PRELIMINARY UTILITY & PUBLIC FACILITY PLAN

PROJECT NO. 21754–01CSCV

DRAWING NO.

UT01

General Notes

1. All work shall be done in accordance with the current City of Colorado Springs Engineering Division (the City) Standard Specifications.
2. The Contractor shall obtain all required permits and notify City Engineering by 1500 hours the business day before inspection is required.
3. Concrete shall have a minimum compressive strength of 4,000 psi and use a City-approved concrete mix.
4. A broom finish, with sweeps perpendicular to the direction of pedestrian traffic, shall be applied to all ramp surfaces.
5. The Contractor shall stamp their company name and construction date at the top right corner of the ramp as viewed from the street.
6. Detectable warnings shall be installed at sidewalk to street transitions and shall consist of prefabricated truncated dome panels approved by the City. The detectable warning panels shall be set into the wet concrete. The domes shall be in a square grid pattern and aligned with pedestrian traffic.
7. All detectable warning surfaces at the base of ramps shall start a minimum of 6 inches from the flowline of the curb and not be more than 8 inches from any point on the flowline of the curb, with the exception for ramps that are constructed within the curved portion of the return as approved by the City.
8. Ramp and detectable warning running slope shall be 8.3% or flatter except on long ramps as specified by Note 14.
9. Drainage structures, traffic signal equipment, or other obstructions shall not be installed in the ramp or turning space areas.
10. If a traffic signal pedestrian push button cannot be mounted within 10 inches horizontally of the pedestrian path or is obstructed from reach then a separate pedestrian push button post assembly shall be installed. Push buttons shall meet the requirements of MUTCD Chapter 4 for pedestrian detectors.
11. Diagonal ramps on the apex are not allowed in new construction. A single diagonal ramp on the apex may be permitted during reconstruction or alteration where physical or site constraints prevent two ramps from being installed and shall require approval from the City on a case-by-case basis.
12. Ramps, excluding flared sides or blended transitions, shall be wholly contained within the width of the crosswalk and/or the pedestrian street crossing that they serve.
13. All ramp joints and grade breaks shall be flush (0^{+}"±1/4"). The joint between the roadway surface and gutter pan shall be flush.
14. In retrofit applications, to avoid chasing grade indefinitely on steep streets, ramp length is not required to exceed 15 feet.
15. The counter slope of the gutter or road at the foot of a ramp, turning space, or blended transition shall not exceed 5.0%.
16. Flared side slopes may exceed 10% only where they abut a non-walkable surface (landscaping or domed surface) or the adjacent circulation path is blocked such that it is unlikely for a pedestrian to walk across the flared side slope.
17. The minimum turning space for new construction is 5 feet by 5 feet. The minimum turning space allowed for retrofit applications is 4 feet by 4 feet. In all types of construction where the turning space is constrained by an element taller than 2 inches such as curb, the turning space shall be 5 feet by 5 feet.
18. Contact the City Forestry Division if it is necessary to disturb trees or roots.
19. All curb ramps shall have a minimum concrete thickness of 6 inches.
20. All sidewalks and turning spaces shall have a cross slope between 0.5% and 2.0%.
21. Ramps shall align with each other across the street.

Slope Table

The table below is intended to be used to convert between the percent (rise/run) and ratio (run:rise) methods of expressing the magnitude of a slope:

PERCENT SLOPE	0.5%	1.0%	2.0%	5.0%	7.1%	8.3%	10.0%
RATIO SLOPE	200:1	100:1	50:1	20:1	14:1	12:1	10:1

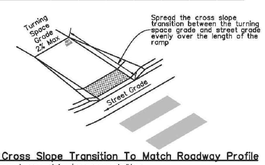

Ramp Cross Slope Transition To Match Roadway Profile

Ramp cross slopes and turning spaces shall be:

A. 2% max when a yield or stop controls present.

B. Permitted to equal the street grade when there is no yield or stop control, when a traffic signal is present, at a mid block crossing location, or in retrofit applications.

COLORADO SPRINGS

SIDEWALK CURB RAMPS GENERAL NOTES AND DETAILS

APPROVED: CITY ENGINEER

ISSUED:	REVISED:	DRAWING NO.
3/28/2019		D-8A

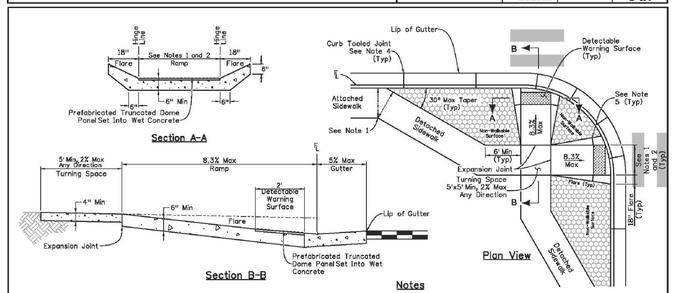

Notes

1. Attached sidewalk shall be 6 feet wide minimum. Detached sidewalk shall be 5 feet wide minimum. Sidewalk width and turning space (TS) may be reduced to 4 feet in retrofit applications.
2. Ramp width shall be the same as the approaching sidewalk or TS but not less than 4 feet. Ramp cross slope shall evenly transition between landing grade and street grade.
3. Sidewalk cross slope shall be 2% maximum measured perpendicular to the direction of walk for detached sidewalk and perpendicular to the curb for attached sidewalk.
4. Curb tooled joints shall be laid out so that at least one joint occurs within the width of each ramp.
5. Tooled joints shall be constructed through the flare at the top of the detectable warning surface.

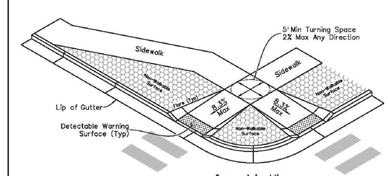

COLORADO SPRINGS

SIDEWALK CURB RAMPS TYPE 1 CURB RAMP

APPROVED: CITY ENGINEER

ISSUED:	REVISED:	DRAWING NO.
3/28/2019		D-8B

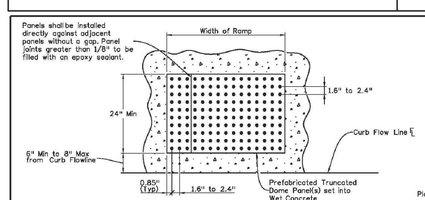

Notes

1. Detectable warnings shall consist of prefabricated panels of truncated domes approved by the City.
2. The detectable warning surface shall span the entire width of the ramp. If conditions do not allow the entire span, the detectable warning surface span shall not be more than 2 inches away from each side of the ramp.
3. Dome spacing shall be equal in both directions.

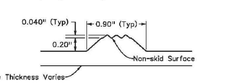

Elevation View of Detectable Warning Plate

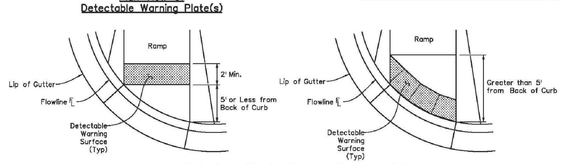

Detectable Warning Panel(s) Placement Guide

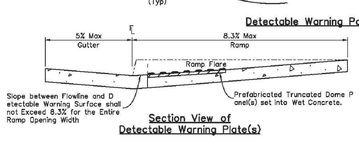

Section View of Detectable Warning Plate(s)

COLORADO SPRINGS

SIDEWALK CURB RAMPS TRUNCATED DOME DETAILS

APPROVED: CITY ENGINEER

ISSUED:	REVISED:	DRAWING NO.
3/28/2019	–	D-8L

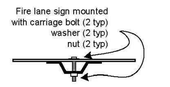

TOP VIEW

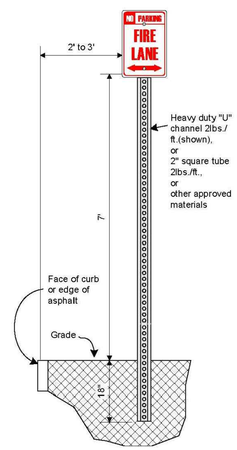

Figure 9 - Typical fire lane signage installation

When striping is used to identify fire apparatus access roads, it must meet the following criteria:

- 6-inch red traffic paint stripe
- 4-inch white reflective lettering/wording with 3/4-inch stroke stating "No Parking Fire Lane"
- Lettering/wording spaced every 25 feet
- See attachment for additional striping design criteria

Figure 114 - Fire lane striping example

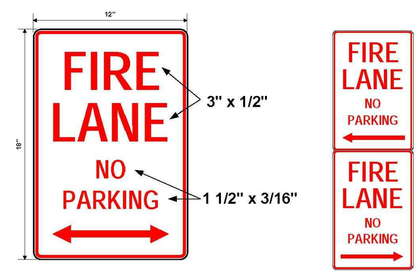

Figure 136 - Detailed fire lane signage design

Figure 147 - Detailed fire lane striping design

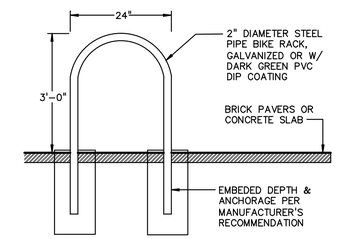

INVERTED "U" BIKE RACK DETAIL

NO SCALE

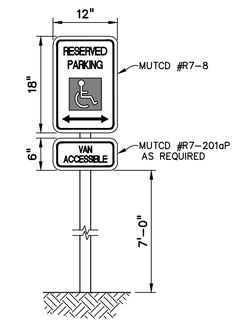

HC SIGN DETAIL

NO SCALE

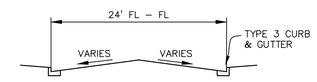

24' DRIVE AISLE (TYP.)

N.T.S.

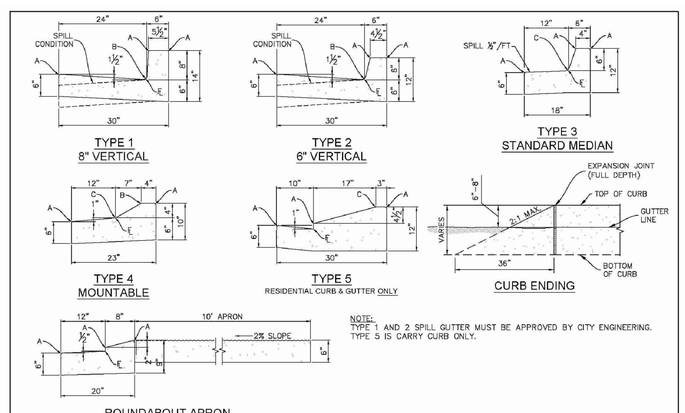

NOTE:
TYPE 1 AND 2 SPILL GUTTER MUST BE APPROVED BY CITY ENGINEERING.
TYPE 5 IS CARRY CURB ONLY.

RADII LEGEND	
A	¼"–½"
B	1½"
C	1½"–2"

COLORADO SPRINGS

CURB & GUTTER DETAILS

APPROVED: Gayle Sturdevant, CITY ENGINEER

ISSUED:	REVISED:	DRAWING NO.
2/28/20		68

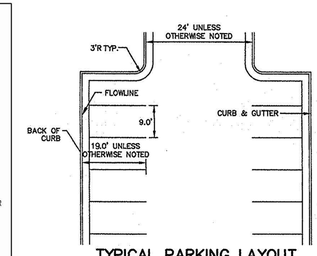

TYPICAL PARKING LAYOUT

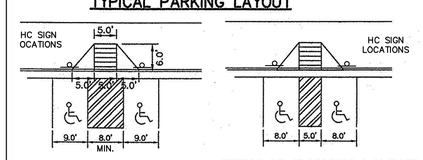

VAN PARKING LAYOUT

REGULAR PARKING LAYOUT

TYP. HANDICAP PARKING LAYOUT

NOT TO SCALE

NOTE:

SIGNAGE NOT APPROVED WITH THIS PLAN.

DEPN–23–0141

PREPARED BY:

DREXEL, BARRELL & CO.
Engineers • Surveyors
101 S. SAHWATCH ST. #100
COLORADO SPGS, COLORADO 80903
CONTACT: TIM D. McCONNELL, P.E.
(719)260-0887
COLORADO SPRINGS • LAFAYETTE

CLIENT:

DBG PROPERTIES, LLC

2164 SW PARK PLACE
PORTLAND, OR 97205
(503) 956–4355
CONTACT: ERIC GRODAHL

DEVELOPMENT PLANS FOR

ROYAL PINE APARTMENTS

LOTS 1–4 THE MARKETS AT PINE CREEK, FILING 6
4150–4180 ROYAL PINE DRIVE
COLORADO SPRINGS, COLORADO

ISSUE	DATE
INITIAL ISSUE	6–30–23
LATEST ISSUE	12–11–23

DESIGNED BY:	TDM
DRAWN BY:	GES
CHECKED BY:	TDM
FILE NAME:	21754–01DT01

PREPARED UNDER MY DIRECT SUPERVISION FOR AND ON BEHALF OF DREXEL, BARRELL & CO.

DRAWING SCALE:
HORIZONTAL: N/A
VERTICAL: N/A

SITE DETAIL SHEET

PROJECT NO. 21754–01CSCV

DRAWING NO.

DT1

SANTULAN
ARCHITECTURE
3457 Ringsby Court #209, Denver, Co. 80216
Ph: 303.825.2595 SantulanArch.com

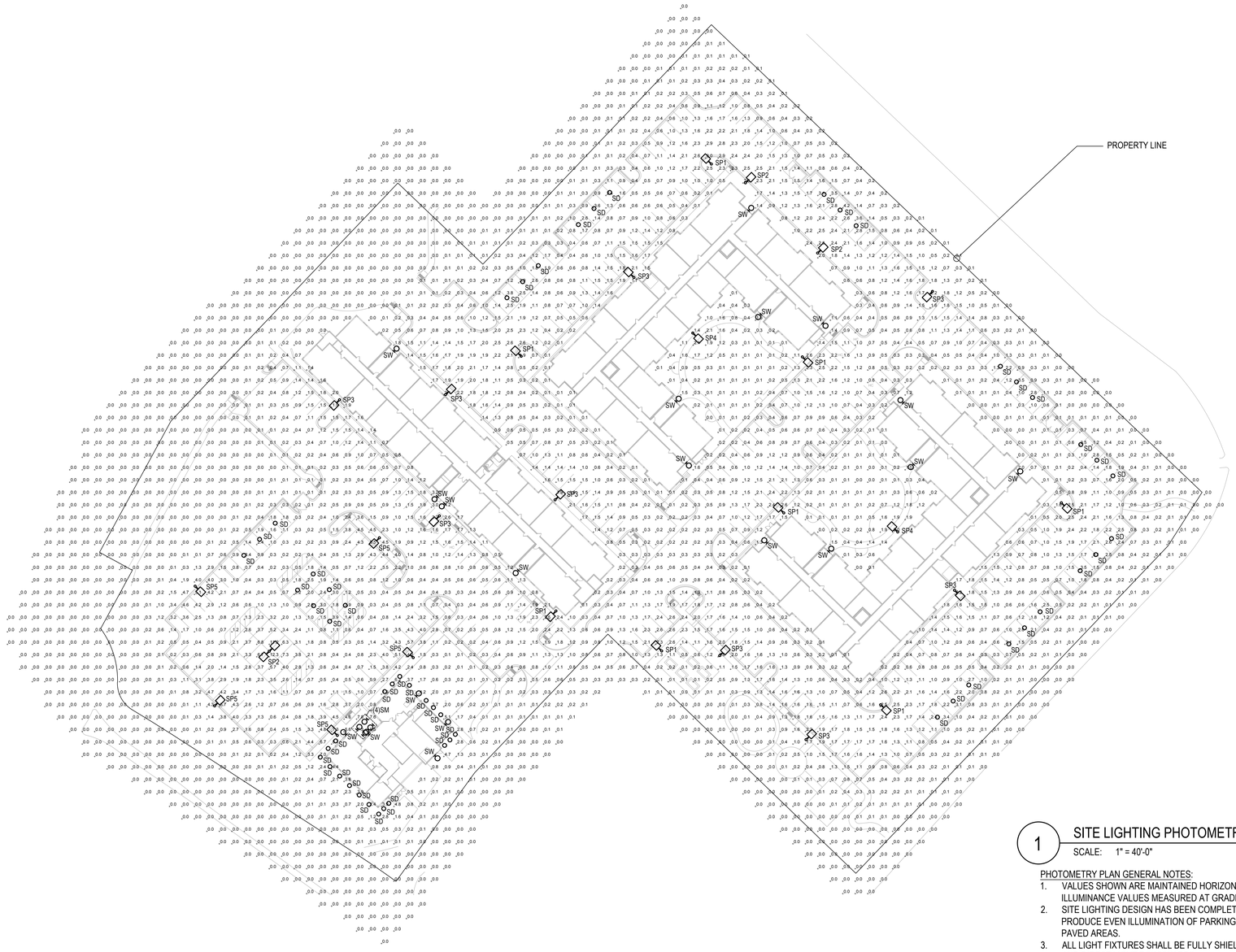

1 SITE LIGHTING PHOTOMETRIC

SCALE: 1" = 40'-0"

PHOTOMETRY PLAN GENERAL NOTES:

1. VALUES SHOWN ARE MAINTAINED HORIZONTAL ILLUMINANCE VALUES MEASURED AT GRADE.
2. SITE LIGHTING DESIGN HAS BEEN COMPLETED TO PRODUCE EVEN ILLUMINATION OF PARKING AND PAVED AREAS.
3. ALL LIGHT FIXTURES SHALL BE FULLY SHIELDED AND DIRECT LIGHT DOWNWARDS.
4. THERE WILL BE NO OFF-SITE GLARE ALLOWED.
5. ALL EXTERIOR LIGHTING, INCLUDING FIXTURE TYPE SW, TO BE PHOTOCELL CONTROLLED. PROVIDE IECC COMPLIANT CONTROLS AND VERIFY ALL CONTROLS WITH OWNERSHIP PRIOR TO PURCHASE AND INSTALL.

SITE LIGHTING DESIGN HAS BEEN COMPLETED TO CONFORM TO CITY OF COLORADO SPRINGS EXTERIOR LIGHTING STANDARDS

STUDIO LIGHTNING
63 SUNSET DR.
BAILEY, CO 80421
303.242.1572

ISSUE	△	DATE
ROYAL PINE APARTMENTS		06-30-23
1ST DP SUBMISSION		
ROYAL PINE APARTMENTS		09-26-23
2ND DP SUBMISSION		
ROYAL PINE APARTMENTS		10-27-23
3RD DP SUBMISSION		

JOB NUMBER:

SITE LIGHTING PHOTOMETRIC

© 2021 Santulan Architecture

Lumiere

Catalog #		Type
Project		SM
Comments		Date
Prepared by		

DESCRIPTION

Lanterra 9004-W1 (Up or Down) and 9004-W2 (Up and Down) are 4.25" O.D., line voltage cylinder fixtures with dimmable LED. The luminaire comes in various mountings, surface mount with integral driver in the housing, remote driver mount with round and square wall plates and square wall integral driver, all of which can be mounted over standard 4 inch j-box. The luminaire also comes with various field replaceable optics and premium color tuning option. It also comes with various lens, louvers and colors or dichroic filters, which can combine up to two at once to create multiple lighting effects. The fixture may be used indoors or outdoors and carries IP66 rating.

SPECIFICATION FEATURES

Material
Housing, hood and mounting stem are precision-machined from corrosion resistant billet stock 6061-T6 aluminum.

Finish
Fixtures constructed from 6061-T6 aluminum are double protected by an ROHS complaint chemical film undercoating and polyester powder coat paint finish, surpassing the rigorous demands of the outdoor environment. A variety of standard colors are available.

Hood
Hood is removable and accepts up to two internal accessories at once (lenses, louvers and filters) to achieve multiple lighting effects. Weep holes prevents water and mineral stains from collecting on the lens, even in the straight up position. The flush lens design reduces fixture length, minimizes debris collection and prevents water and mineral stains from collecting on the lens.

Gasket
Housing and hood are sealed with a high temperature silicone O-ring gasket to prevent water intrusion.

Lens
Tempered glass lens, factory sealed with high temperature silicone O-ring to prevent water intrusion and breakage due to thermal stock.

Hardware
Stainless steel hardware is standard to provide maximum corrosion resistance.

Electrical
Long life LED system coupled with electronic driver (120-277V/50-60Hz) is compatible with TRIAC (Trailing Edge), ELV (Forward phase) and 0-10V dimming to deliver optical performance. Light can be dimmed from 100-1% while maintaining constant CCT. It will operate in -30°C to 50°C unless noted otherwise. The driver incorporates surge protection. LED's are available in 2700K, 3000K, 3500K at 90CRI and 97CRI, 4000K at 80CRI and 97CRI, 5000K at 80CRI and are industry leading high output with 87% lumen maintenance at 60,000hrs.

Compliance
Components are UL recognized and luminaires are cULus listed for 50°C ambient environments unless noted otherwise, wet location listed, and ROHS compliant. IP66 Rated. Options to meet Buy American Act requirements

Warranty
Lumiere warrants the Lanterra series of fixtures against defects in material and workmanship for five (5) years. Auxiliary equipment such as LED drivers carries the original manufacturer's warranty.

Lanterra 9004

LED
INTERIOR / EXTERIOR
CYLINDER FLOOD LIGHT
CERTIFICATION DATA
cULus - 1598
Wet Location Listed - IP66
LM79/LM80 Compliant
ROHS Compliant
10W LED, L70/102,000@25° Celcius
20W LED, L70/102,000@25° Celcius
30W LED, L70/102,000@25° Celcius

DIMENSIONS

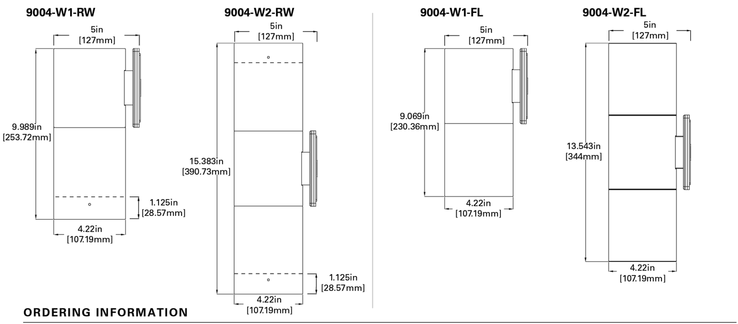

ORDERING INFORMATION

DOMESTIC PREFERENCES 9	SERIES	DIRECTION	HOOD	LED CCT & CRI	FIELD REPLACEABLE OPTIC 1	FIELD REPLACEABLE OPTIC 2 2	FINISH	LIGHT LEVEL	VOLTAGE	MOUNTING	OPTIONS
[Blank]=Standard BAA=Buy American Act	9004	W1 Up or Down W2 6 Up and Down	RW Standard-Recessed Lens with weep holes - Outdoor RI Recessed Lens with no weep holes - Indoor FL Flush lens hood	Standard CRI LED2790 - 2700K, 90 CRI LED 3090 - 3000K, 90 CRI LED 3590 - 3500K, 90 CRI LED 4080 - 4000K, 80 CRI LED 5080 - 5000K, 80 CRI Premium CRI LED 2797 - 2700K, 97 CRI LED 3097 - 3000K, 97 CRI LED 3597 - 3500K, 97 CRI LED 4097 - 4000K, 97 CRI	S Spot M Medium F Flood W Wide Flood	S Spot M Medium F Flood W Wide Flood	Standard Paint Finish BK Black BZ Bronze CS City Silver WT White	L1 Light Level 1 (10W) L2 Light Level 2 (20W) L3 Light Level 3 (30W) LC1 Light Level Color 1 (12W) LC2 Light Level Color 2 (20W)	UNV 120-277V	Surface Mount - Wall, Ceiling, Ground RSM Round Surface Mount- mounts directly to junction box Thermal Limitations (unless otherwise noted 50C) 9004-W1-xxx-L3-xxx-RSM (45C) 9004-W2-xxx-L3-xxx-RSM (35C) 9004-W2-xxx-LC2-xxx-RSM (40C) Remote Driver Housing WRR 8 Remote Driver Housing - Round Wall Plate WRS 8 Remote Driver Housing - Square Wall Plate Thermal Limitations (unless otherwise noted 50C) 9004-W1-xxx-L3-xxx-WRx (45C) 9004-W2-xxx-L3-xxx-WRx (35C) 9004-W2-xxx-LC2-xxx-WRx (40C) Integral Driver Mount WIS 3,4 Wall Integral Driver Plate Thermal Limitations (unless otherwise noted 45C) 9004-(W1,W2)-xx-L1-xx-WIS (50C)	SVPD 5 Stand-alone integral sensor

Notes: 1. Order LC remote separately
2. Only available for double head option (W2)
3. 9004-W1 not available in LC2, L3
4. 9004-W2 not available in L2, L3, LC1 and LC2
5. Only available for Single head, Up or down (W1) with RSM only
6. W2 doubles input wattage listed
7. Only available for LEDCR
8. Remote Driver distance up to 60', For L3 (30W) remote distance up to 15'
9. Only product configurations with this designated prefix are built to be compliant with the Buy American Act of 1933 (BAA). Please refer to DOMESTIC PREFERENCES website for more information. Components shipped separately may be separately analyzed under domestic preference requirements.
10. Accessories sold separately will be separately analyzed under domestic preference requirements. Consult factory for further information.

COOPER Lighting Solutions

Specifications and dimensions subject to change without notice.

TD506025EN
6-2022

HALO

Catalog #		Type
Project		SD
Comments		Date
Prepared by		

DESCRIPTION

The Halo Surface Mount LED Downlight (SMD) is a low profile surface mounting luminaire with a modern look and high performance. SMD6 (6") is designed for installation in many 3-1/2" and 4" square, octagon, or round junction boxes. Supply wire adapter with LED quick wiring connector included. The SMD6 may also retrofit in 5" and 6" aperture IC and Non-IC recessed housings.

SPECIFICATION FEATURES

HOUSING
- Non-electrically conductive polycarbonate frame.
- High impact diffuse polystyrene lens provides shielding to the light guide with no pixilation
- Stamped aluminum housing provides thermal cooling achieving L70 at 50,000 hours in IC and non-IC applications

GASKETS
- Closed cell gasket achieves restrictive airflow and wet location requirements without additional caulking

OPTICS
- Precision acrylic light guide organizes source flux into wide distribution with 1.2 – 1.4 spacing criteria useful for general area illumination

LED
- Mid power LED array provide a uniform source with high efficiency and long life.
- Available in 90 CRI minimum, R9 greater than 50 and color accuracy within 3 SDCM provide color accuracy and uniformity

DRIVER
SMD 120V
- Integral 120V 50/60Hz constant current driver provides noise free operation.
- Continuous, flicker-free dimming from 100% to 5% with select leading or trailing edge 120V phase cut dimmers.
- Dimming to 5% is best assured using dimmers with low end trim adjustment. Consult dimmer manufacturer for compatibility and conditions of use. (Note some dimmers require a neutral in the wallbox.)
- Inline electrical quick connect and E26 adapter (provided) provides mains connections.

SMD 120-277V
- Integrated 120-277V 60Hz constant current driver provides noise free operation.
- SMD Universal Voltage (120-277V) configurations are recommended for use with compatible 0-10V DC low voltage dimmers only.

MOUNTING/RETENTION
- Adjustable spider plate allows for quick installation into both junction boxes and recessed housings.
- Torsion springs and friction blades included

ELECTRICAL JUNCTION BOX MOUNTING
- The SMD may be used in compatible electrical junction boxes in direct contact with insulation including spray foam insulation.
- Suitable for installation in many 3-1/2" and 4" square, octagon, and round electrical junction boxes.
Note: SMD120-277V UNV is only compatible with junction boxes that provide minimum depth of 2-1/8".
- Installer must ensure compatibility of fit, wiring and proper mounting in the electrical junction box. This includes all applicable national and local electrical and building coded

RECESSED HOUSING MOUNTING
- May be installed in IC recessed housings in direct contact with insulation
Note: Not for use in recessed housing in direct contact with spray foam insulation. Refer to NEMA LSD 57-2013.

Torsion Spring 5" & 6"
- Precision formed torsion spring bracket kit included
- The torsion springs adjust on the mounting plate to fit 5" or 6" compatible housings

Friction Blade 5" & 6"
- Precision formed friction blades included
- For retrofit in 5" and 6" housings without torsion springs mounting tabs.
- Friction blade design allows the SMD to be installed in any position within the housing aperture (360 degrees)

DESIGNER SKINS (SOLD SEPARATELY)
- SMD skins are accessory rings in both round and square. These skins attach to the SMD for a permanent finish. Refer to the SMD accessories specification sheet for details.
- Matte White (Paintable)
- Satin Nickel
- Tuscan Bronze

WARRANTY
- Five year limited warranty, consult website for details. www.cooperlighting.com

COMPLIANCE
- cULus Certified for use with Halo housings and for use with other's housings, see instruction sheet for conditions of acceptability.
- Wet and Damp Location listed, airtight per ASTM-E283
- Suitable for use in closets, compliant with NFPA® 70, NEC® Section 410.16 (A)(3) and 410.16 (C)(5)
- EMI/RFI emissions per FCC 47CFR Part 15B
- Contains no mercury or lead and RoHS compliant.
- Photometric testing in accordance with IES LM-79-08
- Lumen maintenance projections in accordance with IES LM-80-08 and TM-21-11.
- Can be used for State of California Title 24 high efficacy luminaire compliance, reference the California Energy Commission Title 20 Appliance Efficiency Database for current listings.
- Can be used for International Energy Conservation Code (IECC) and high efficiency luminaire compliance
- ENERGY STAR® listed, reference database for current listings

SMD6 Series
6 inch Round and Square

SMD6R
SMD6S

6" Surface Mount Downlight

Suitable for ceiling or wall electrical junction boxes

Suitable for 5" and 6" recessed housing retrofit

Non-conductive Dead Front

90 CRI nominal CCT 2700K 3000K 3500K 4000K 5000K

Refer to ENERGY STAR® Certified Products List.
Can be used to comply with California Title 24 High Efficacy requirements.
Certified to California Appliance Efficiency Database under JA8.

COOPER Lighting Solutions

Note: For Direct mount product please refer to the SLD6-DM spec sheet.

TD518242EN
September 20, 2018 2:26 PM

Project		Catalog #		Type	SW
Prepared by		Notes		Date	

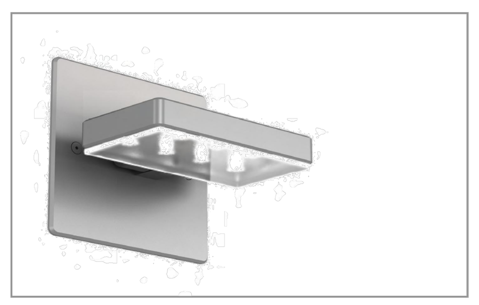

Lumière

EON 303-W1-LEDB1

Ceiling / Wall Mount
Direct / Indirect

Typical Applications
• Hospitality • Commerical Landscape • Outdoor Area/Site • Residential • Architectural

Interactive Menu
- Order Information page 2
- Product Specifications page 2
- Lumen Maintenance page 3
- Product Warranty

Product Certification

Product Features

wet location

Top Product Features
- Adjustable direct or indirect luminaire - 180° Adjustable at knuckle
- 2700K, 3000K or 3500K or 4000K Color Temperature and Amber (585-595nm)
- Forward/Lateral Throw or Flood Optics with diffuse glass sealed lens
- Patented AccuLED OpticsTM System
- Universal Input LED Driver Included (120 - 277V, 50/60 Hz)
- ELV or 0-10 Dimming

COOPER Lighting Solutions

PS526029EN page 1
October 29, 2021 7:57 PM

Streetworks

Catalog #		Type
Project		SP1-5
Comments		Date
Prepared by		

DESCRIPTION

The Ridgeview™ LED area roadway luminaire is the compact, efficient, economical approach to LED area lighting. A pure blend of traditional form and LED efficiency; the Ridgeview luminaire provides functional, low profile design with excellent operating performance. Patent pending modular LightBAR technology delivers uniform and energy conscious illumination to parking lots and perimeter security lighting applications.

SPECIFICATION FEATURES

Construction
Rugged one-piece, die-cast aluminum housing secures the thermally conductive LED panel and electrical chamber. Low profile, 3G vibration rated compact design minimizes wind load requirements. Extruded aluminum frame secured with stainless steel hardware confines the LightBAR panel to the thermally conductive housing. The unique glide bracket LightBAR panel allows for easy access to the electrical chamber.

Optics
Choice of twelve patented, high-efficiency AccuLED Optic™ technology manufactured from injection-molded acrylic. Optics are precisely designed to shape the distribution the distribution, maximizing efficiency and application spacing. AccuLED Optic technology, creates consistent distributions with the scalability to meet customized application requirements. Offered Standard in 4000K (+/- 275K) CCT and minimum 70 CRI. Optional 3000K CCT, 5000K CCT and 5700K CCT. For the ultimate level of spill light control, an optional house-side shield accessory can be field or factory installed. The house-side shield is designed to seamlessly integrate with the SL2, SL3 or SL4 optics.

Electrical
LED drivers mount to die-cast aluminum back housing for optimal heat sinking, operation efficacy, and prolonged life. Standard drivers feature electronic universal voltage (120-277V 50/60Hz), 347V 60Hz or 480V 60Hz operation, greater than 0.9 power factor, less than 20% harmonic distortion, and is suitable for operation in -40°C to 40°C ambient environments. All fixtures are shipped standard with 10kV/10kA common – and differential – mode surge protection. LightBARs feature and IP66 enclosure rating and maintain greater than 95% lumen maintenance at 60,000 hours per IESNA TM-21. Occupancy sensor and dimming options available.

Mounting
Cast aluminum 6" arm includes bolt guides allowing for easy position of the fixture during installation to pole. Standard single carton packaging of housing, square pole arm and round pole adapter provide contractor friendly installation. Wall mount models feature a cast aluminum arm that is directly mounted to a 4" supplied wall plate secured with set screws.

Finish
Components finished in a five-stage super TGIC polyester powder coat paint, 2.5 mil nominal thickness for superior protection against fade and wear. Standard color is bronze. Optional colors include black, grey, white, dark platinum and graphite metallic. RAL and custom color matches available. Options to meet Buy American and other domestic preference requirements.

Warranty
Five-year warranty.

RDG
RIDGEVIEW

1 - 4 LightBARs
Solid State LED

AREA LUMINAIRE

DIMENSIONS

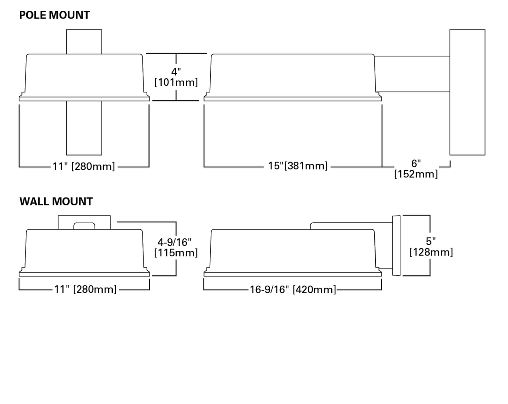

CERTIFICATIONS
UL/cUL Listed
LM79 / LM80 Compliant
3G Vibration Rated
IP65 Fixture Rating
IP66 LightBARs
ISO 9001

ENERGY DATA
Electronic LED Driver
>0.9 Power Factor
<20% Total Harmonic Distortion
120-277V/50 & 60Hz, 347V/60Hz, 480V/60Hz
-40°C Minimum Temperature
40°C Ambient Temperature Rating
50°C (Optional) Ambient Temperature Rating

EPA
Effective Projected Area: (Sq. Ft.)
Without Arm: 0.48
With Arm: 0.67

SHIPPING DATA
Approximate Net Weight:
12.5 lbs (5.8 kgs.)

COOPER Lighting Solutions

TD500014EN
November 23, 2021 8:17 AM

LUMINAIRE SCHEDULE

Symbol	Label	General Description	Mounting Height	Color	Catalog Number	Lamp	LLF	Watts	Color Temp.	SHIELDING
○	SD	DOWNLIGHT OVERHANGS & CARPORTS	9'-6" AFG	WHITE	HALO SMD6R-6-930-WH	LED	1.00	9.6W	3000K	FULL CUTOFF
	SM	SIDE MOUNT PERGOLAS	11'-6" AFG	BLACK	LUMIERE 9004-W1-RW-LED3090-F-BK-L1-UNV	LED	1.00	10W	3000K	FULL CUTOFF
	SP1	SITE POLE PARKING & DRIVES	20'-0" AFG	BLACK	STREETWORKS RDG-E03-LED-D-U-T4-BK-7030-SA1175	LED	1.00	75W	3000K	FULL CUTOFF
	SP2	SITE POLE PARKING & DRIVES	12'-0" AFG	BLACK	STREETWORKS RDG-E03-LED-D-U-T4-BK-7030-SA1176	LED	1.00	(2)75W	3000K	FULL CUTOFF
	SP3	SITE POLE PARKING & DRIVES	20'-0" AFG	BLACK	STREETWORKS RDG-E03-LED-D-U-T3-BK-7030-SA1175	LED	1.00	75W	3000K	FULL CUTOFF
	SP4	SITE POLE WALKWAYS	12'-0" AFG	BLACK	STREETWORKS RDG-E01-LED-D-U-T2-BK-7030-SA1175	LED	1.00	25W	3000K	FULL CUTOFF
	SP5	SITE POLE PARKING & DRIVES	12'-0" AFG	BLACK	STREETWORKS RDG-E03-LED-D-U-T3-BK-7030-SA1175	LED	1.00	75W	3000K	FULL CUTOFF
	SW	WALL SCONCE ENTRIES	8'-0" AFG	BLACK	LUMIERE 303-W1-LEDB1-3000-UNV-T4-DIM10-BK	LED	1.00	8.5W	3000K	FULL CUTOFF

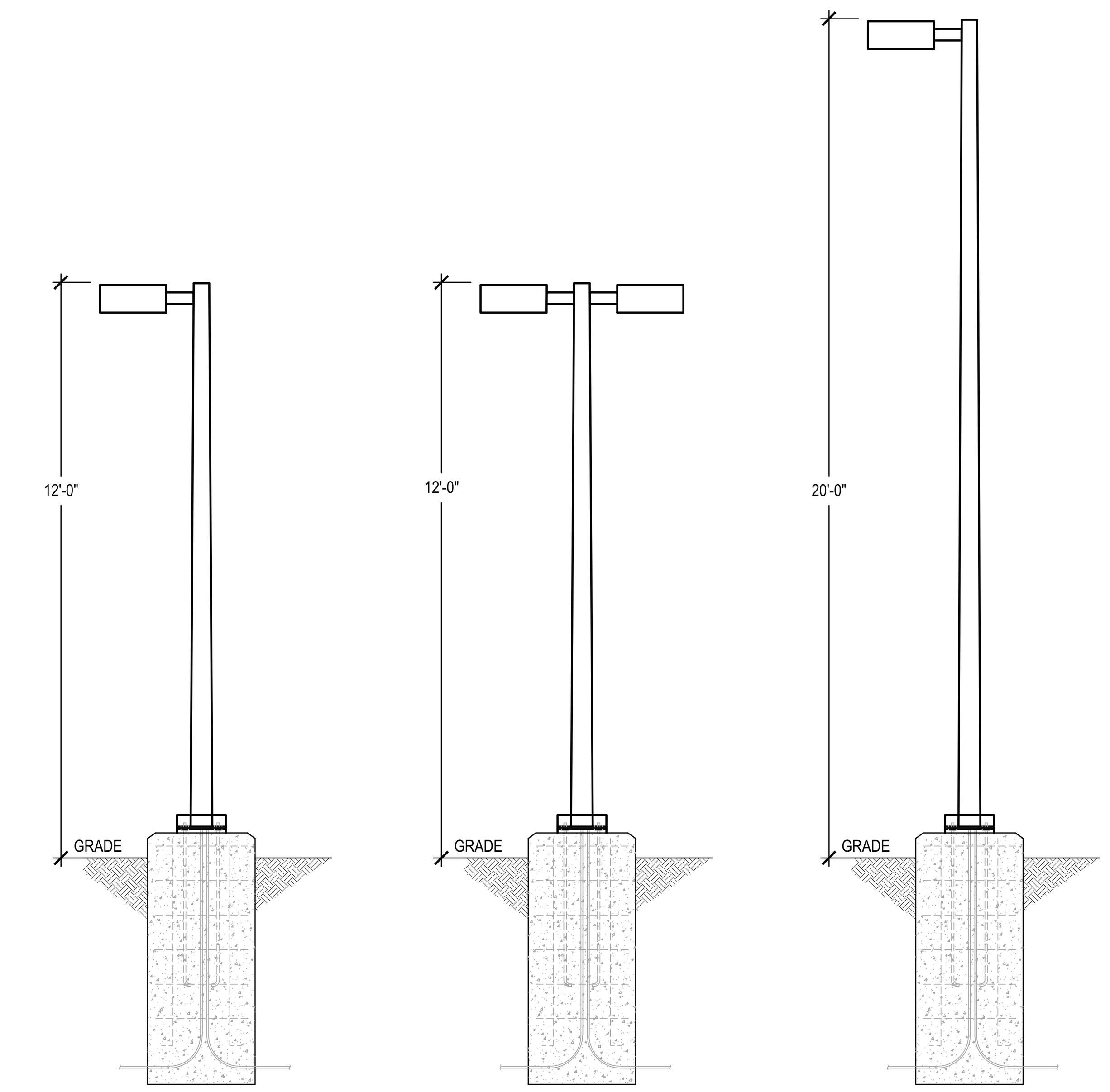

1 LIGHT POLE DETAILS
SCALE: NTS

SANTULAN
ARCHITECTURE
3457 Ringsby Court #209 Denver, Co. 80216
Ph. 303 825 2595 SantulanArch.com

STUDIO LIGHTNING
63 SUNSET DR.
BAILEY, CO 80421
303.242.1572

ISSUE	△	DATE
ROYAL PINE APARTMENTS		06-30-23
1ST DP SUBMISSION		
ROYAL PINE APARTMENTS		09-26-23
2ND DP SUBMISSION		
ROYAL PINE APARTMENTS		10-27-23
3RD DP SUBMISSION		

JOB NUMBER:

LIGHTING
DETAILS

© 2021 Santulan Architecture

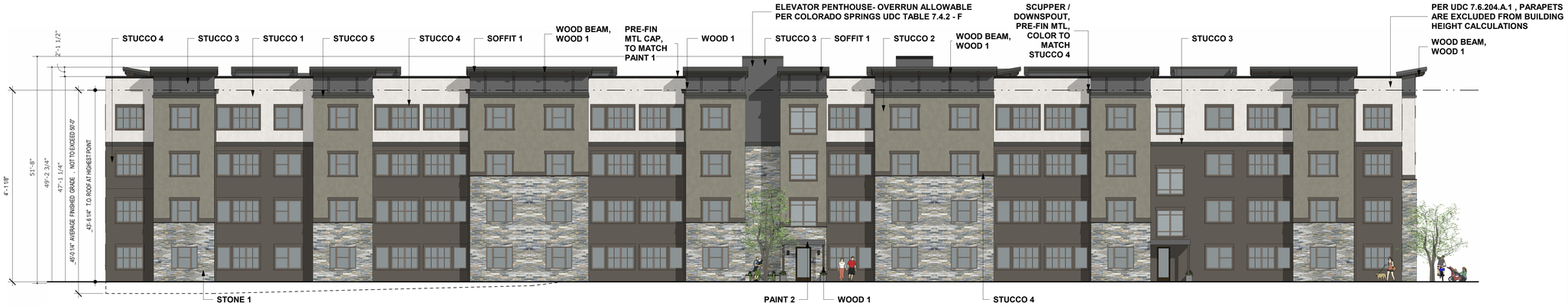

1 BUILDING 1 - SOUTH ELEVATION - 3/32" = 1'-0"

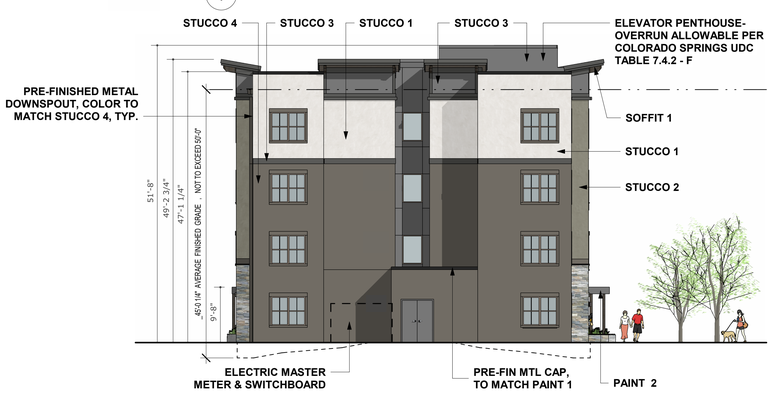

2 BUILDING 1 - WEST ELEVATION - 3/32" = 1'-0"

3 BUILDING 1 - EAST ELEVATION - 3/32" = 1'-0"

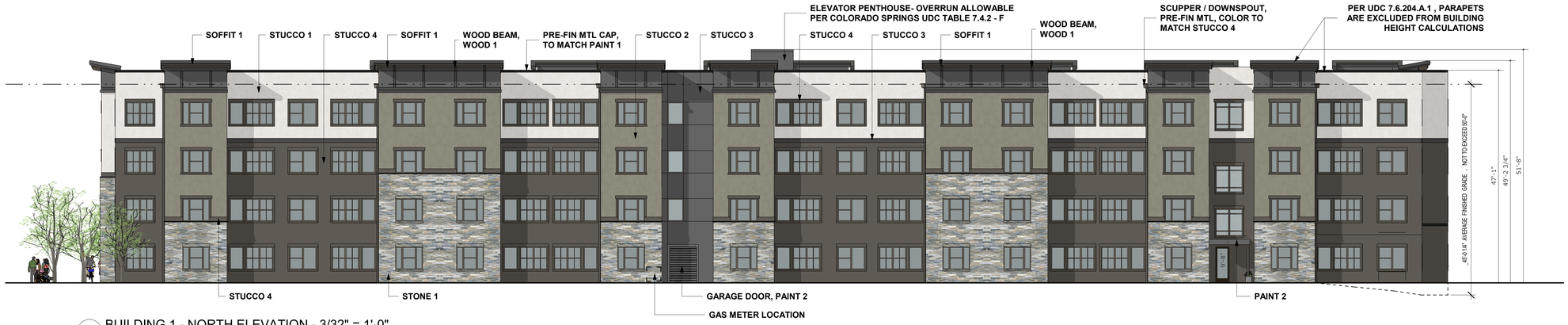

4 BUILDING 1 - NORTH ELEVATION - 3/32" = 1'-0"

NOTE:

- PARAPETS WILL BE 42" MIN. ABOVE ROOF LINE, THEREFORE NO FALL PROTECTION WILL BE REQUIRED AT ROOF EDGE. ANY MECHANICAL EQUIPMENT THAT IS VISIBLE BEYOND THE PARAPET WALLS WILL BE ADAQUATELY SCREENED TO THE DRB'S SATISFACTION.
- POTENTIAL FUTURE SOLAR PANELS MAY BE ADDED TO THE CLUBHOUSE ROOF, NOT SHOWN FOR CLARITY

MATERIAL PALETTE

	STUCCO 1 SW - 6203 SPARE WHITE		PAINT 1 SW - 6258 TRICORN BLACK		WINDOWS MATERIALS: VINYL COLOR: CLAY / TAN
	STUCCO 2 SW - 6165 CONNECTED GRAY		PAINT 2 SW - 7069 IRON ORE		DOORS MATERIALS: HOLLOW METAL COLOR: PAINT TO MATCH WINDOW COLOR
	STUCCO 3 SW - 7069 IRON ORE		PAINT 3 SW - 2849 WESTCHESTER GRAY		ASPHALT SHINGLES CHARCOAL GRAY B.O.D. - ESTATE GRAY, OWENS CORNING
	STUCCO 4 SW - 7048 URBAN BRONZE		WOOD 1 STAIN - CLASSIC GREY MNFR: MINWAX		STONE 1 MNFR'D STACKED STONE B.O.D. - ELDORADO, KORYAK RIDGE
	STUCCO 5 SW - 6258 TRICORN BLACK		SOFFIT 1 TRADITIONAL WOOD PANELING B.O.D. - WOODTONE, SCOTTISH ALE		

SANTULAN ARCHITECTURE
3457 Ringsby Court #209 Denver, Co 80216
Ph. 303 825 2595 SantulanArch.com

ROYAL PINE APARTMENTS

4150-4180 ROYAL PINE DRIVE
COLORADO SPRINGS, COLORADO

ISSUE	DATE
DP - 1ST SUBMISSION	06-30-2023
DP - 2ND SUBMISSION	09-26-2023

JOB NUMBER: 2301

ELEVATIONS - BUILDING 1

© 2021 Santulan Architecture

APPLICATION NUMBER: DEPN-23-0141

1 BUILDING 2 & 3 - EAST ELEVATION - 3/32" = 1'-0"

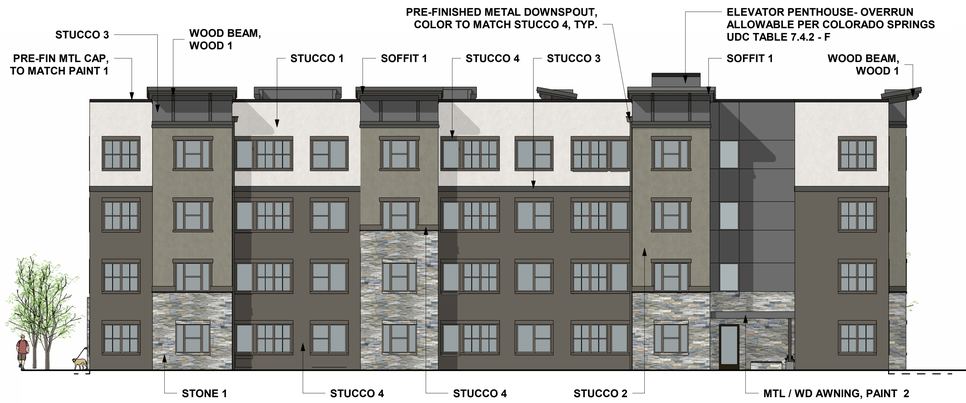

2 BUILDING 2 & 3 - NORTH ELEVATION - 3/32" = 1'-0"

3 BUILDING 2 & 3 - SOUTH ELEVATION - 3/32" = 1'-0"

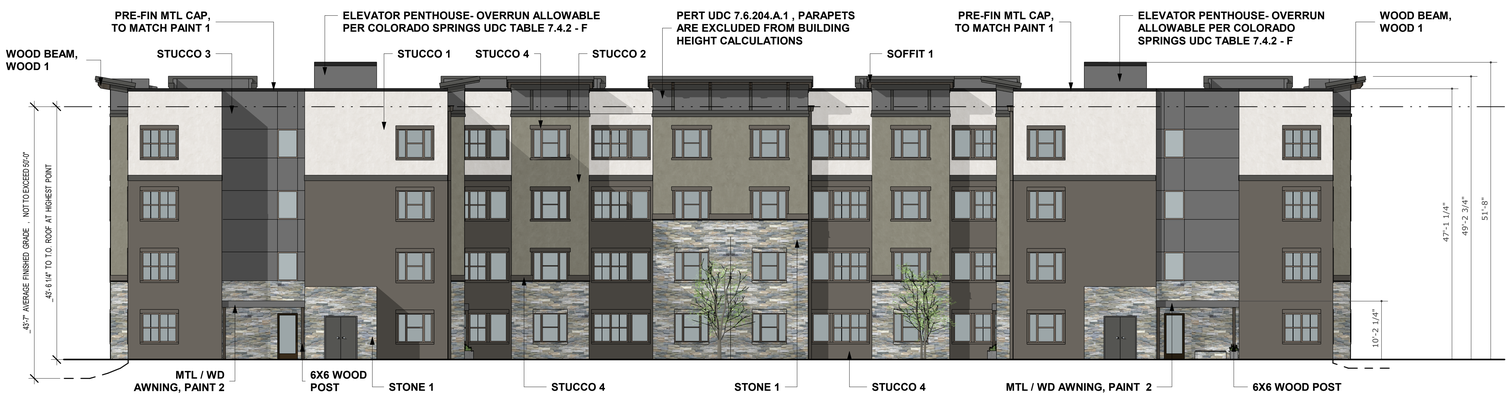

4 BUILDING 2 & 3 - WEST ELEVATION - 3/32" = 1'-0"

NOTE:

- PARAPETS WILL BE 42" MIN. ABOVE ROOF LINE, THEREFORE NO FALL PROTECTION WILL BE REQUIRED AT ROOF EDGE. ANY MECHANICAL EQUIPMENT THAT IS VISIBLE BEYOND THE PARAPET WALLS WILL BE ADAQUATELY SCREENED TO THE DRB'S SATISFACTION.
- POTENTIAL FUTURE SOLAR PANELS MAY BE ADDED TO THE CLUBHOUSE ROOF, NOT SHOWN FOR CLARITY

MATERIAL PALETTE

	STUCCO 1 SW - 6203 SPARE WHITE		PAINT 1 SW - 6258 TRICORN BLACK		WINDOWS MATERIALS: VINYL COLOR: CLAY / TAN
	STUCCO 2 SW - 6165 CONNECTED GRAY		PAINT 2 SW - 7069 IRON ORE		DOORS MATERIALS: HOLLOW METAL COLOR: PAINT TO MATCH WINDOW COLOR
	STUCCO 3 SW - 7069 IRON ORE		PAINT 3 SW - 2849 WESTCHESTER GRAY		ASPHALT SHINGLES CHARCOAL GRAY B.O.D. - ESTATE GRAY, OWENS CORNING
	STUCCO 4 SW - 7048 URBAN BRONZE		WOOD 1 STAIN - CLASSIC GREY MNFR: MINWAX		STONE 1 MNFR'D STACKED STONE B.O.D. - ELDORADO, KORYAK RIDGE
	STUCCO 5 SW - 6258 TRICORN BLACK		SOFFIT 1 TRADITIONAL WOOD PANELING B.O.D. - WOODTONE, SCOTTISH ALE		

SANTULAN ARCHITECTURE
3457 Ringsby Court #209 Denver, Co 80216
Ph. 303 825 2595 SantulanArch.com

ROYAL PINE APARTMENTS

4150-4180 ROYAL PINE DRIVE
COLORADO SPRINGS, COLORADO

ISSUE	△	DATE
DP - 1ST SUBMISSION		06-30-2023
DP - 2ND SUBMISSION		09-26-2023

JOB NUMBER: 2301

ELEVATIONS - BUILDING 2&3

© 2021 Santulan Architecture

APPLICATION NUMBER: DEPN-23-0141

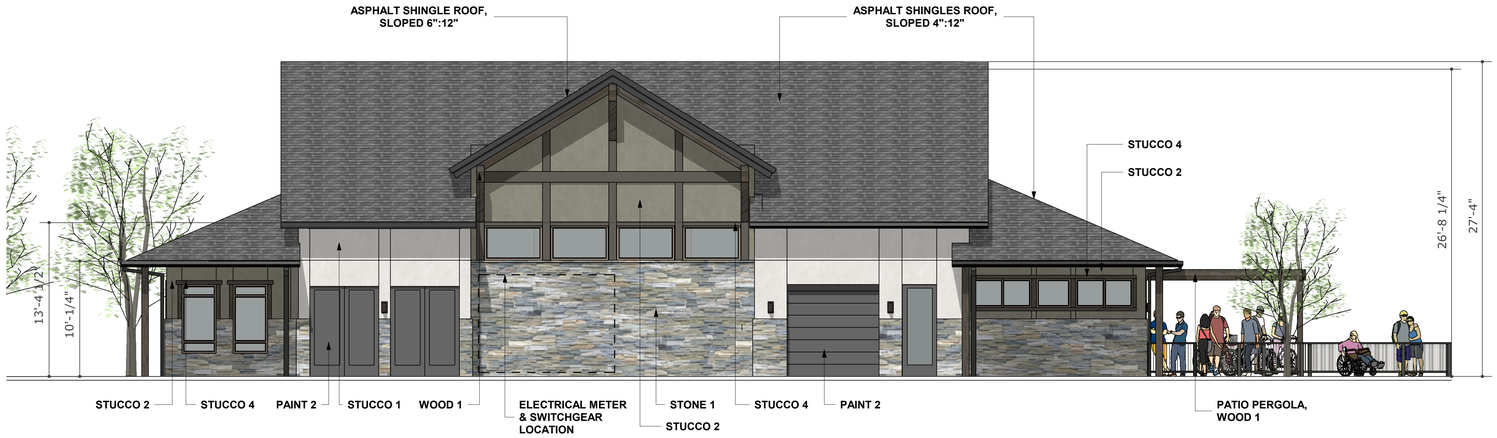

4 CLUBHOUSE - EAST ELEVATION - 1/8" = 1'-0"

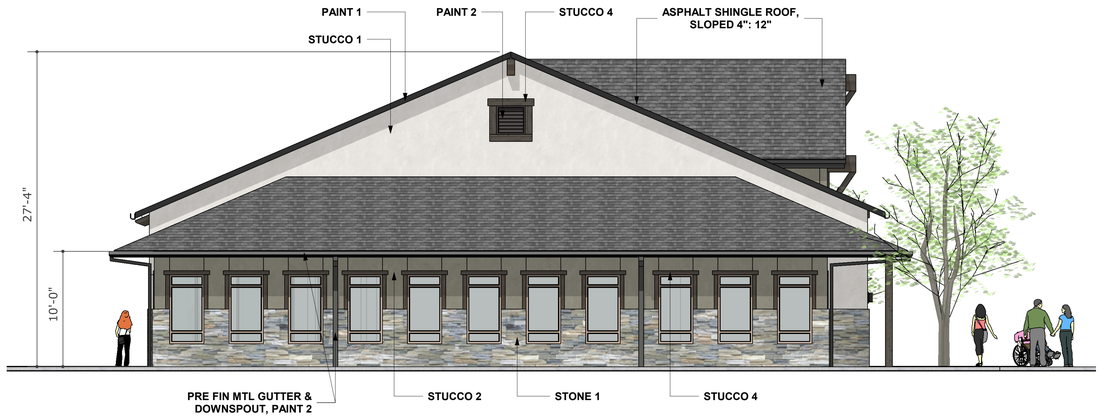

3 CLUBHOUSE - SOUTH ELEVATION - 1/8" = 1'-0"

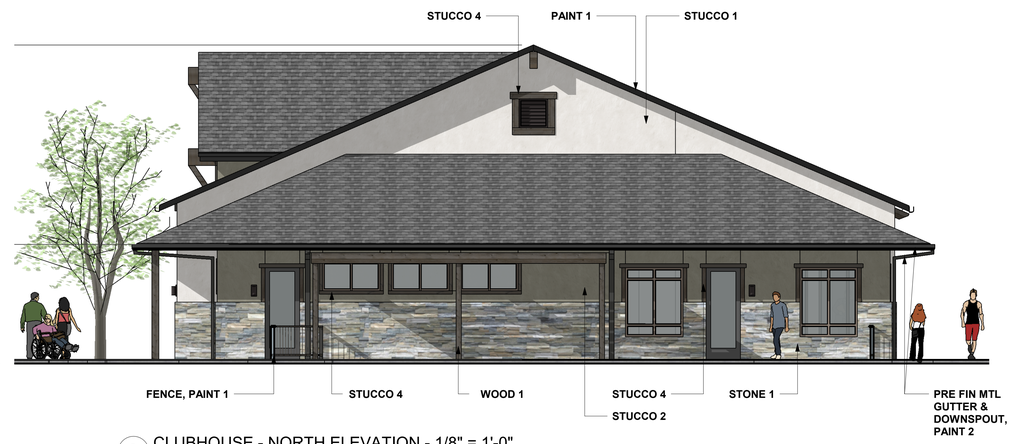

2 CLUBHOUSE - NORTH ELEVATION - 1/8" = 1'-0"

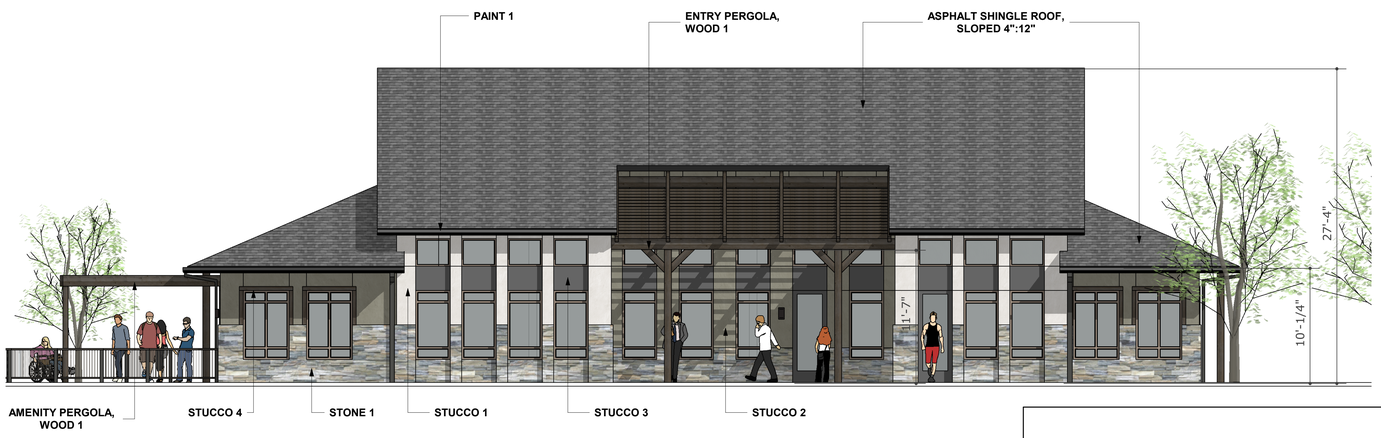

1 CLUBHOUSE - WEST ELEVATION - 1/8" = 1'-0"

NOTE:

- PARAPETS WILL BE 42" MIN. ABOVE ROOF LINE, THEREFORE NO FALL PROTECTION WILL BE REQUIRED AT ROOF EDGE. ANY MECHANICAL EQUIPMENT THAT IS VISIBLE BEYOND THE PARAPET WALLS WILL BE ADAQUATELY SCREENED TO THE DRB'S SATISFACTION.
- POTENTIAL FUTURE SOLAR PANELS MAY BE ADDED TO THE CLUBHOUSE ROOF, NOT SHOWN FOR CLARITY

MATERIAL PALETTE

STUCCO 1 SW - 6203 SPARE WHITE	PAINT 1 SW - 6258 TRICORN BLACK
STUCCO 2 SW - 6165 CONNECTED GRAY	PAINT 2 SW - 7069 IRON ORE
STUCCO 3 SW - 7069 IRON ORE	PAINT 3 SW - 2849 WESTCHESTER GRAY
STUCCO 4 SW - 7048 URBAN BRONZE	WOOD 1 STAIN - CLASSIC GREY MNFR: MINWAX
STUCCO 5 SW - 6258 TRICORN BLACK	SOFFIT 1 TRADITIONAL WOOD PANELING B.O.D. - WOODTONE, SCOTTISH ALE

WINDOWS MATERIALS: VINYL COLOR: CLAY / TAN	
DOORS MATERIALS: HOLLOW METAL COLOR: PAINT TO MATCH WINDOW COLOR	
ASPHALT SHINGLES CHARCOAL GRAY B.O.D. - ESTATE GRAY, OWENS CORNING	
STONE 1 MNFR'D STACKED STONE B.O.D. - ELDORADO, KORYAK RIDGE	

SANTULAN ARCHITECTURE
3457 Ringsby Court #209 Denver, Co 80216
Ph. 303 825 2595 SantulanArch.com

ROYAL PINE APARTMENTS

4150-4180 ROYAL PINE DRIVE
COLORADO SPRINGS, COLORADO

ISSUE	△ DATE
DP - 1ST SUBMISSION	06-30-2023
DP - 2ND SUBMISSION	09-26-2023

JOB NUMBER: 2301

ELEVATIONS - CLUBHOUSE BUILDING

© 2021 Santulan Architecture

APPLICATION NUMBER: DEPN-23-0141

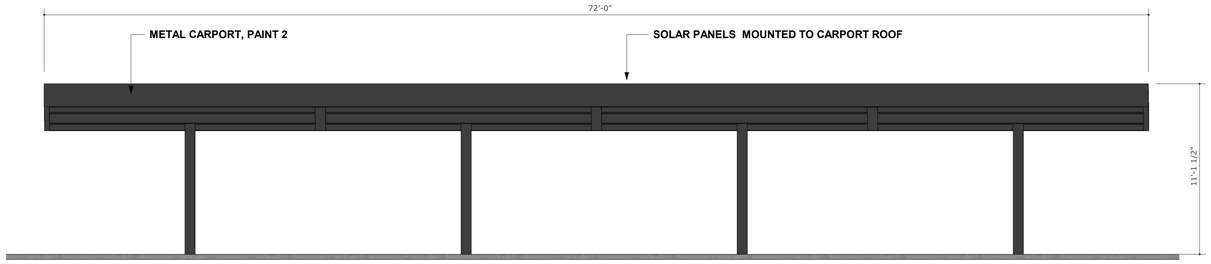

1 CARPORT - FRONT ELEVATION - 1/4" = 1'-0"

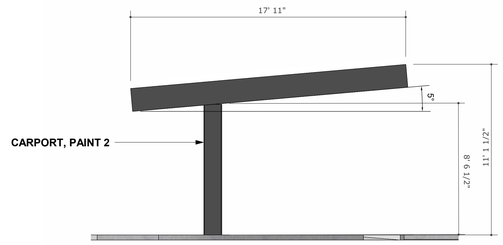

2 CARPORT - SIDE ELEVATION - 1/4" = 1'-0"

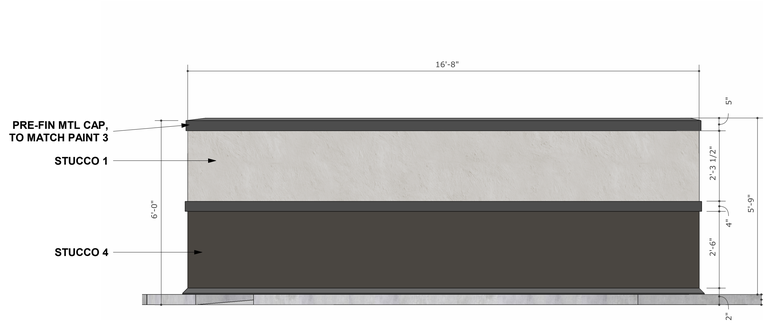

3 TRASH ENCLOSE - SIDE ELEVATION - 1/2" = 1'-0"

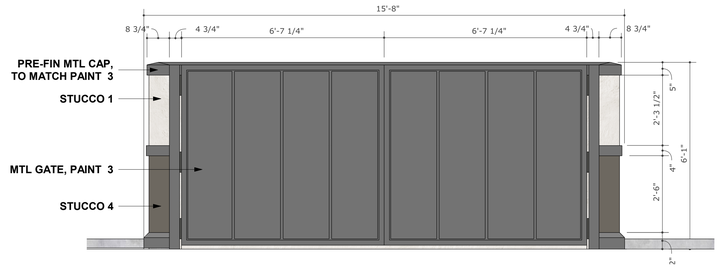

4 TRASH ENCLOSURE - FRONT ELEVATION - 1/2" = 1'-0"

5 TYP. WOOD AWNING - FRONT ELEVATION - 1/2" = 1'-0"
SCALE: 1" = 1'-0"

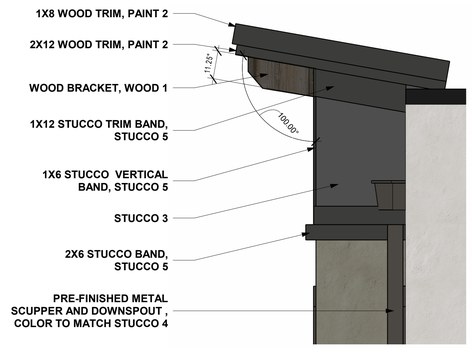

6 WOOD AWNING - SIDE ELEVATION - 1/2" = 1'-0"
SCALE: 1" = 1'-0"

NOTE:

PARAPETS WILL BE 42" MIN. ABOVE ROOF LINE, THEREFORE NO FALL PROTECTION WILL BE REQUIRED AT ROOF EDGE. ANY MECHANICAL EQUIPMENT THAT IS VISIBLE BEYOND THE PARAPET WALLS WILL BE ADAQUATELY SCREENED TO THE DRB'S SATISFACTION.

MATERIAL PALETTE

STUCCO 1	SW - 6203 SPARE WHITE
STUCCO 2	SW - 6165 CONNECTED GRAY
STUCCO 3	SW - 7069 IRON ORE
STUCCO 4	SW - 7048 URBAN BRONZE
STUCCO 5	SW - 6258 TRICORN BLACK

PAINT 1	SW - 6258 TRICORN BLACK
PAINT 2	SW - 7069 IRON ORE
PAINT 3	SW - 2849 WESTCHESTER GRAY
WOOD 1	STAIN - CLASSIC GREY MNFR: MINWAX
SOFFIT 1	TRADITIONAL WOOD PANELING B.O.D. - WOODTONE, SCOTTISH ALE

WINDOWS	MATERIALS: VINYL COLOR: CLAY / TAN
DOORS	MATERIALS: HOLLOW METAL COLOR: PAINT TO MATCH WINDOW COLOR
ASPHALT SHINGLES	CHARCOAL GRAY B.O.D. - ESTATE GRAY, OWENS CORNING
STONE 1	MNFR'D STACKED STONE B.O.D. - ELDORADO, KORYAK RIDGE

SANTULAN
ARCHITECTURE
3457 Ringsby Court #209 Denver, Co 80216
Ph. 303 825 2595 SantulanArch.com

ROYAL PINE APARTMENTS

4150-4180 ROYAL PINE DRIVE
COLORADO SPRINGS, COLORADO

ISSUE	DATE
DP - 1ST SUBMISSION	06-30-2023
DP - 2ND SUBMISSION	09-26-2023

JOB NUMBER: 2301

ELEVATIONS - SITE ELEMENTS

© 2021 Santulan Architecture

APPLICATION NUMBER: DEPN-23-0141

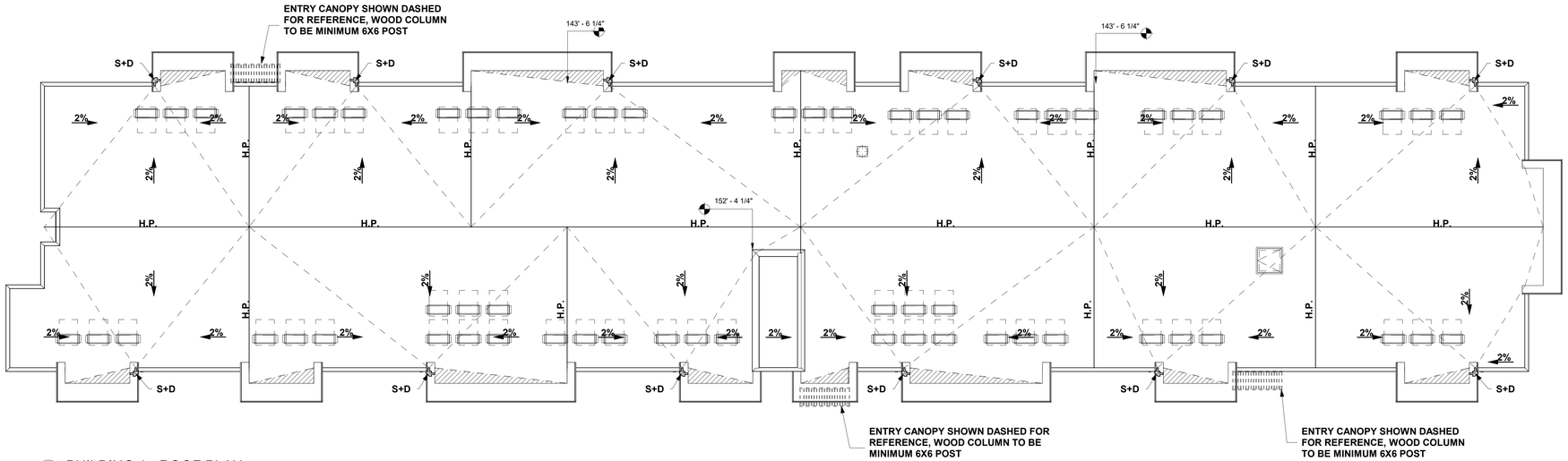

1 BUILDING 1 - ROOF PLAN
SCALE: 3/32" = 1'-0"

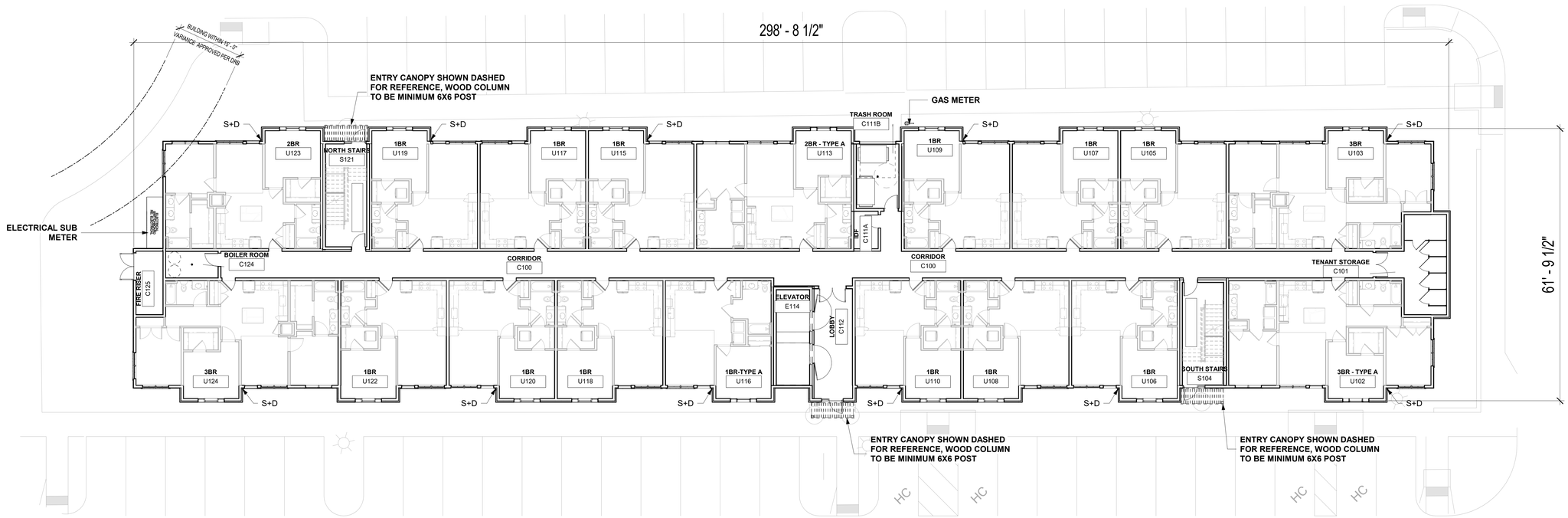

2 BUILDING 1 - LEVEL 1 PLAN
SCALE: 3/32" = 1'-0"

SANTULAN
ARCHITECTURE
3457 Ringsby Court #209 Denver, Co 80216
Ph. 303 825 2595 SantulanArch.com

ROYAL PINE APARTMENTS

4150-4180 ROYAL PINE DRIVE
COLORADO SPRINGS, COLORADO

ISSUE	△	DATE
DP - 1ST SUBMISSION		06-30-2023
DP - 2ND SUBMISSION		09-26-2023

JOB NUMBER: 2301

PLANS - BUILDING 1

© 2021 Santulan Architecture

APPLICATION NUMBER: DEPN-23-0141

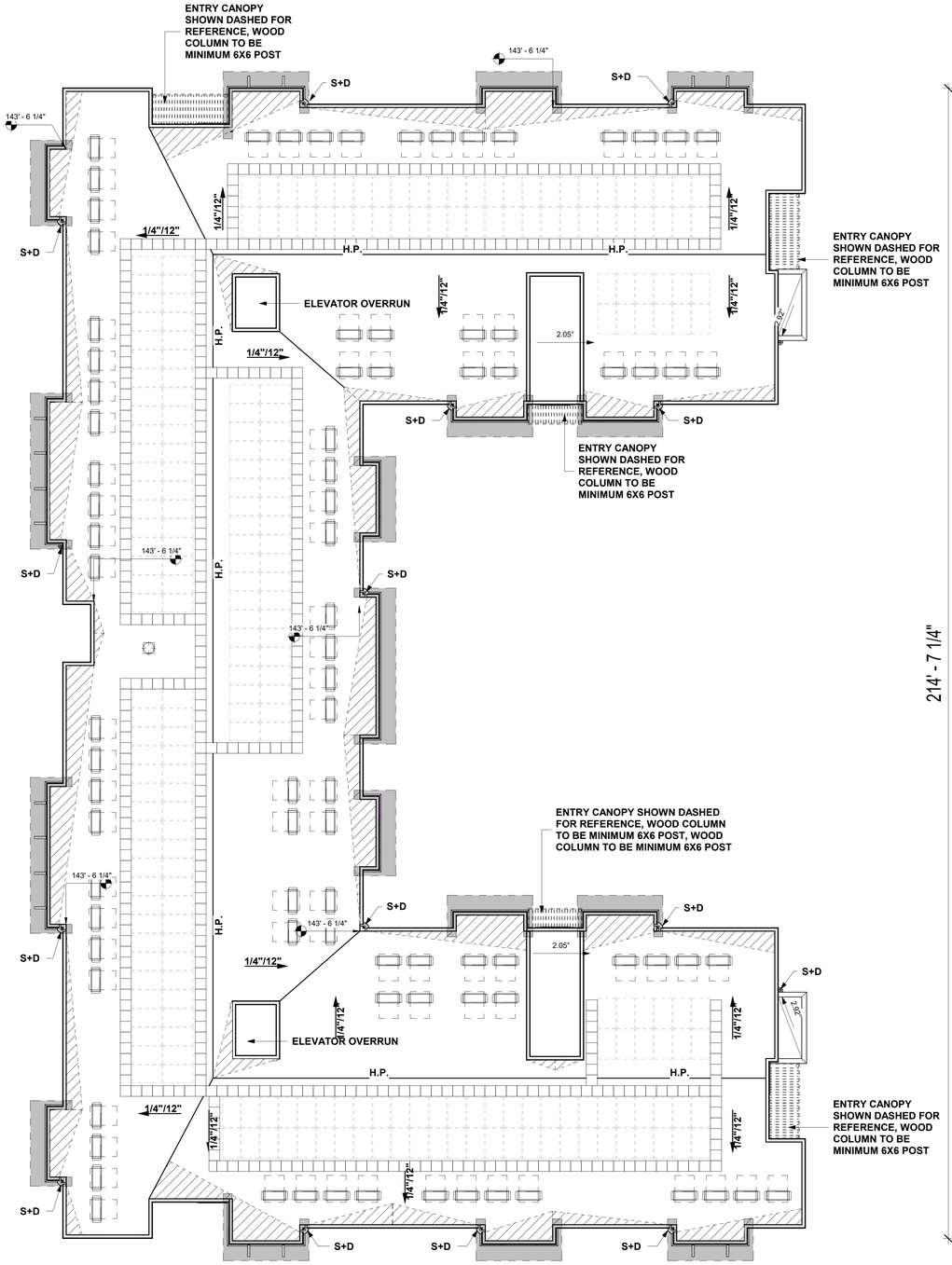

2 BUILDING 2 & 3 - ROOF PLAN
SCALE: 3/32" = 1'-0"

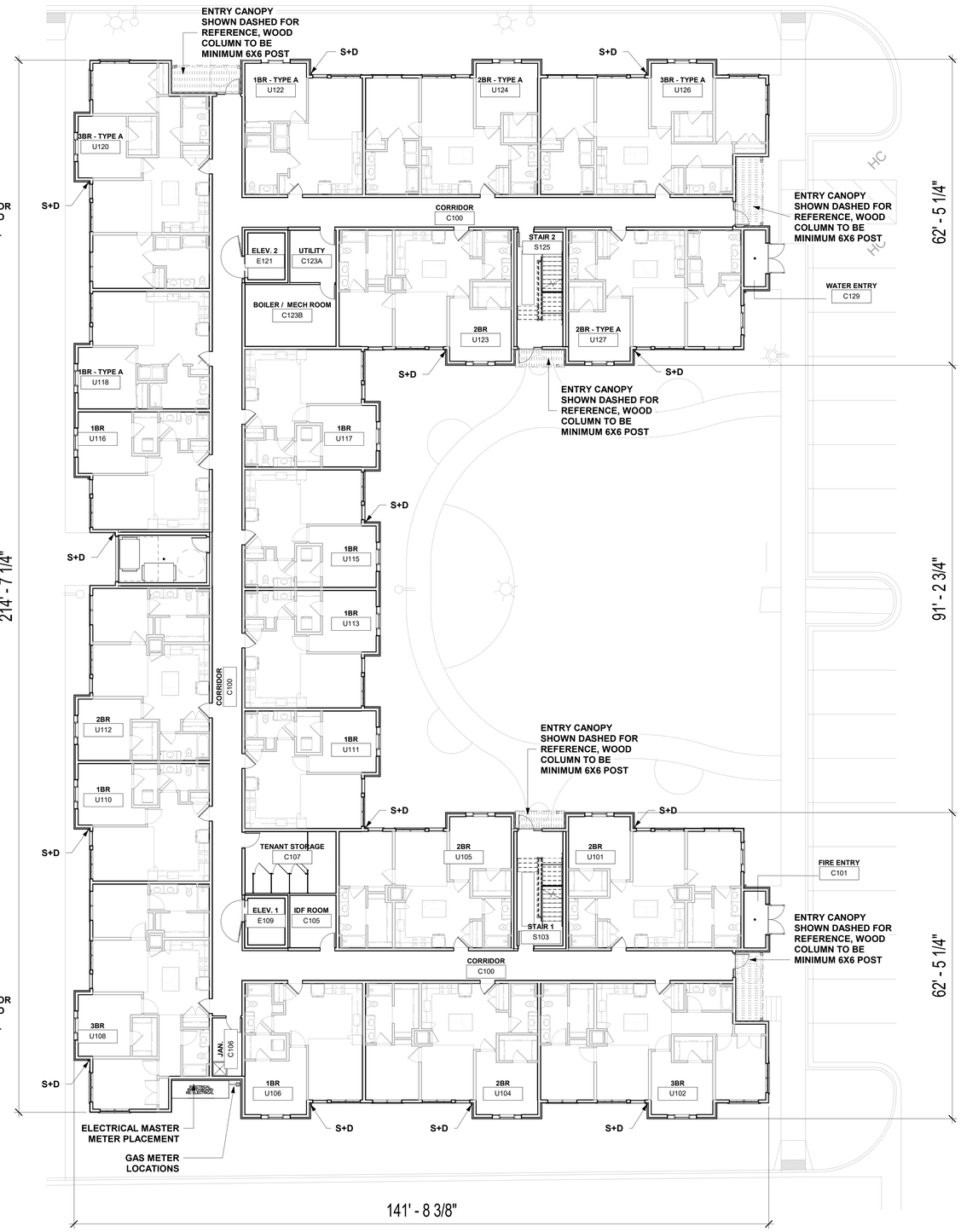

1 BUILDING 2 & 3 - LEVEL 1 PLAN
SCALE: 3/32" = 1'-0"

SANTULAN ARCHITECTURE
3457 Ringsby Court #209 Denver, Co 80216
Ph. 303 825 2595 SantulanArch.com

ROYAL PINE APARTMENTS

4150-4180 ROYAL PINE DRIVE
COLORADO SPRINGS, COLORADO

ISSUE	△ DATE
DP - 1ST SUBMISSION	06-30-2023
DP - 2ND SUBMISSION	09-26-2023

JOB NUMBER: 2301

PLANS - BUILDINGS 2 & 3

© 2021 Santulan Architecture

APPLICATION NUMBER: DEPN-23-0141

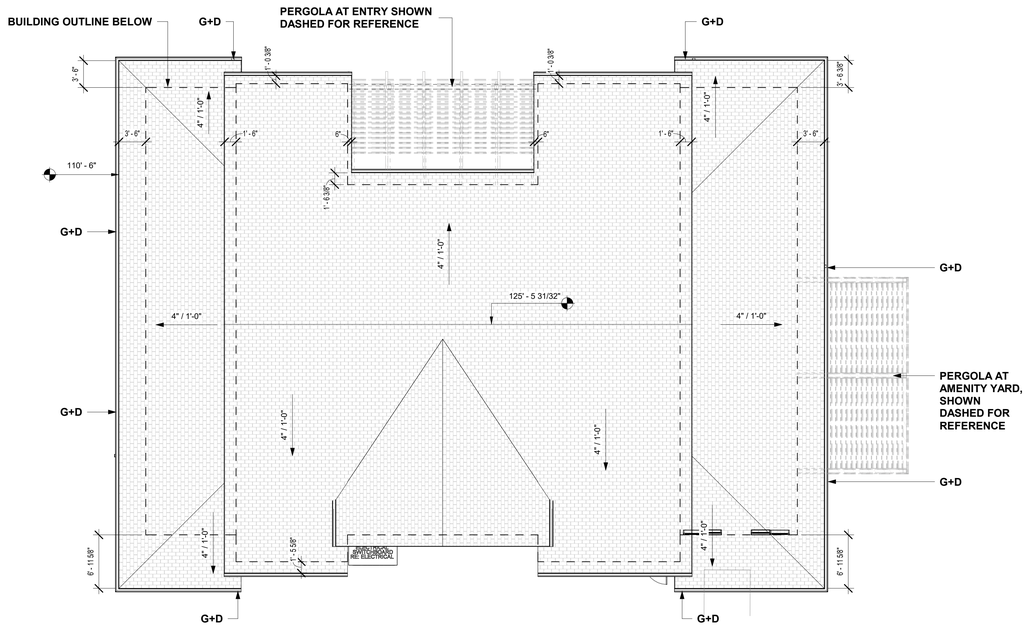

2 CLUBHOUSE - ROOF PLAN
SCALE: 1/8" = 1'-0"

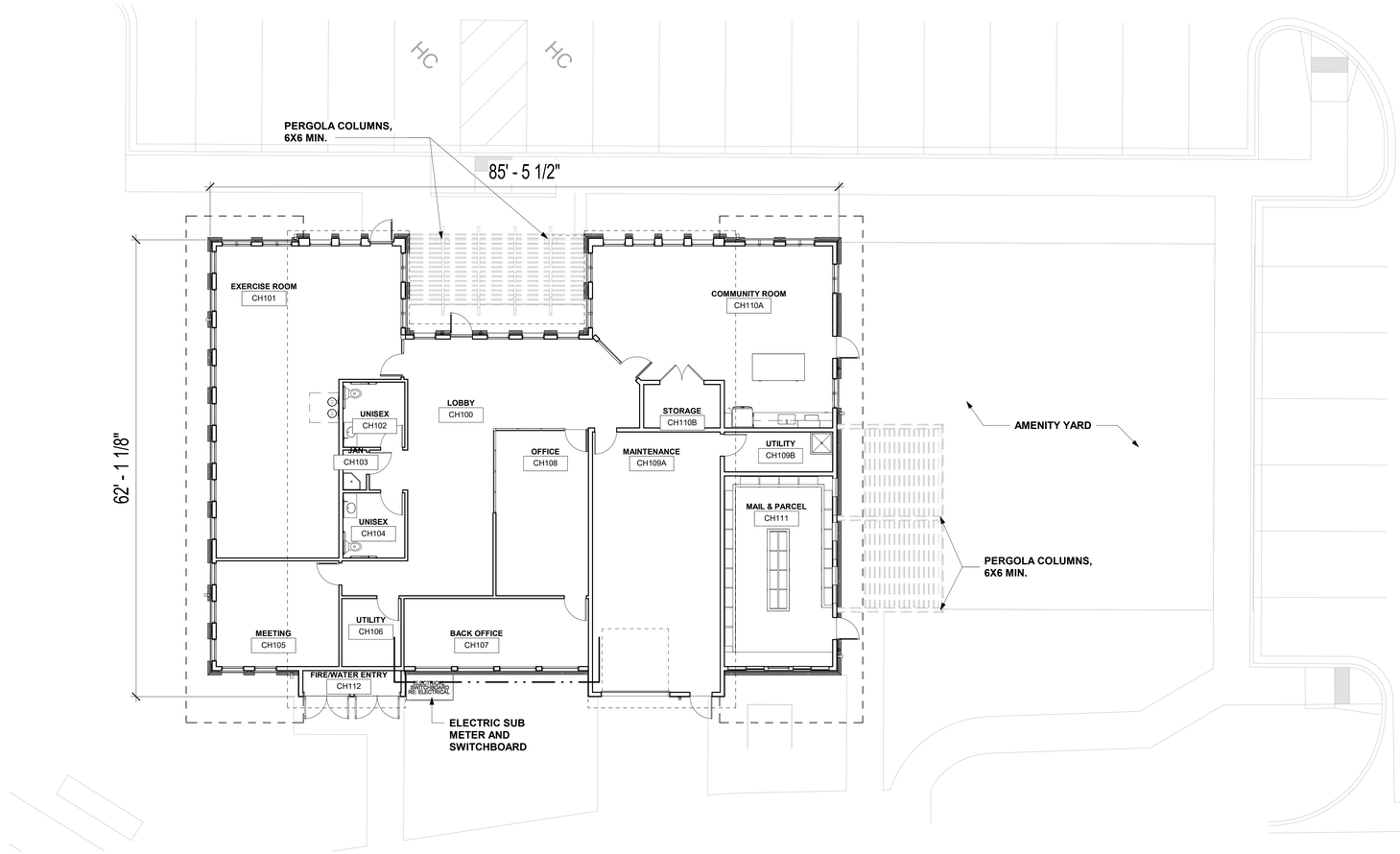

1 CLUBHOUSE - LEVEL 1 PLAN
SCALE: 1/8" = 1'-0"

SANTULAN
ARCHITECTURE
3457 Ringsby Court #209 Denver, Co 80216
Ph. 303 825 2595 SantulanArch.com

ROYAL PINE APARTMENTS

4150-4180 ROYAL PINE DRIVE
COLORADO SPRINGS, COLORADO

ISSUE	△	DATE
DP - 1ST SUBMISSION		06-30-2023
DP - 2ND SUBMISSION		09-26-2023

JOB NUMBER: 2301

PLANS - CLUBHOUSE

© 2021 Santulan Architecture

APPLICATION NUMBER: DEPN-23-0141

	STUCCO 1 SW - 6203 SPARE WHITE
	STUCCO 2 SW - 6165 CONNECTED GRAY
	STUCCO 3 SW - 7069 IRON ORE
	STUCCO 4 SW - 7048 URBAN BRONZE
	STUCCO 5 SW - 6258 TRICORN BLACK
	PAINT 1 SW - 6258 TRICORN BLACK

	PAINT 2 SW - 7069 IRON ORE
	PAINT 3 SW - 2849 WESTCHESTER GRAY
	WOOD 1 STAIN - CLASSIC GREY B.O.D - MNFR: MINWAX
	SOFFIT 1 TRADITIONAL WOOD PANELING B.O.D. - WOODTONE COLOR: SCOTTISH ALE
	WINDOWS MATERIALS: VINYL COLOR: CLAY / TAN
	DOORS MATERIALS: HOLLOW METAL COLOR: PAINT TO MATCH WINDOW COLOR

	ASPHALT SHINGLES CHARCOAL / GRAY B.O.D. - OWENS CORNING , ESTATE GRAY
	STONE 1 MNFR'D STACKED STONE B.O.D. - ELDORADO STONE - KORYAK RIDGE

*** THESE PRODUCTS ARE THE BASIS OF DESIGN. ACTUAL PRODUCT MAY BE SUBSTITUTED BASED ON AVAILABILITY OR LEAD TIME.**

MATERIAL PALETTE

SANTULAN
ARCHITECTURE
3457 Ringsby Court #209 Denver, Co 80216
Ph. 303 825 2595 SantulanArch.com

ROYAL PINE APARTMENTS

4150-4180 ROYAL PINE DRIVE
COLORADO SPRINGS, COLORADO

ISSUE	DATE
DP - 1ST SUBMISSION	06-30-2023
DP - 2ND SUBMISSION	09-26-2023

JOB NUMBER: 2301

MATERIAL BOARD

© 2021 Santulan Architecture

APPLICATION NUMBER: DEPN-23-0141

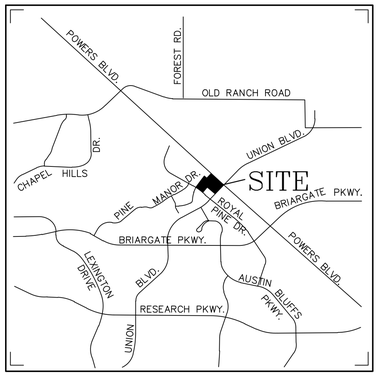

VICINITY MAP

NOT TO SCALE

N

BRIARGATE CROSSING DESIGN GUILDELINES NOTE

REQUIREMENTS - REFER TO CHAPTER 5

1 TREE PER 600 SF OF LANDSCAPE AREA (INCLUDING STREET TREES AND PARKING AREAS): REQUIRED / PROVIDED -

STREET TREES REQURIED/PROVIDED -

PARKING ISLANDS: 2 DECIDUOUS OR ORNAMENTAL TREES EACH ISLAND: REQUIRED / PROVIDED -

PARKING STALL SCREENING: EVERGREEN SHRUBS PROVIDED

AUTOMATIC IRRIGATION SYSTEM SHALL BE INSTALLED PER SECTION 5.7

ALL FENCES SHALL BE CONSTRUCTED PER SECTION 5.11.2

LANDSCAPE MAINTENANCE NOTE

LANDSCAPE IMPROVEMENTS AND MAINTENANCE SHALL BE THE RESPONSIBILITY OF OWNER, AND /OR THEIR ASSIGNS.

"STREET TREES, STREETSCAPE IMPROVEMENTS, AND VEGETATION WITHIN THE CITY ROW SHALL BE MAINTAINED BY THE ABUTTING PROPERTY OWNER."

UDC LANDSCAPE REQUIREMENTS

GENERAL REQUIREMENTS

25% MAXIMUM TURF ALLOWED OF TOTAL LANDSCAPE AREA	PROVIDED
TOTAL AREA: 99,846 SF X 25 = 24,961 SF	23,300 SF

LANDSCAPE SETBACKS (LS)

STREET NAME OR ZONE BOUNDARY (ELEV.)	STREET CLASSIFICATION	WIDTH (FT.) REQ./PROV.	LINEAR FOOTAGE	TREE/FEET REQUIRED	NO. OF TREES REQ./PROVIDED
ROYAL PINE DRIVE	NON-ARTERIAL	10/10 FT	252 LF	1/30 FT	10/10 EXISTING
UNION BLVD.	MAJOR ARTERIAL	25/25 FT	424 LF	1/20 FT	22/22
POWERS BLVD.	EXPRESSWAY	25/25 FT	531 LF	1/20 FT	27/15

SHRUB SUBSTITUTES REQ./PROV. (25% MAX)	ORNAMENTAL GRASS SUB. 2/1 REQ./PROV.	SETBACK PLANT ABBR. DENOTED ON PLAN	PERCENT GROUND PLANE VEG. REQ./PROV.
0/0	0/0	LS	75%/75%
0/0	0/0	LS	75%/75%
80/80	0/0	LS	75%/75%

MOTOR VEHICLE LOTS (MV)

NO. OF VEHICLE SPACES PROVIDED	SHADE TREES (1/5 SPACES) REQ./PROV.	VEHICLE LOT FRONTAGE(S)	LENGTH OF FRONTAGE (FT) (EXCLUDING DRIVEWAYS)	2/3 LENGTH OF FRONTAGE (FT)
309	21/21	POWERS BLVD UNION BLVD ROYAL PINE	400 LF 255 LF 115 LF	267 LF 170 LF 77 LF

(15) MIN. 3' SCREENING PLANTS REQ./PROV.	EVERGREEN PLANTS REQ. 50%/PROV.	LENGTH OF SCREENING (WALL OR BERM) PROV.	VEHICLE LOT PLANT ABBR. ON PLAN	PERCENT GROUND PLANE EG. REQ./PROV.
0/0	0/0	400 - WALL LF	MV	75%/75%
34/34	17/17	0 LF	MV	75%/75%
15/15	9/9	0 LF	MV	75%/75%

INTERNAL LANDSCAPING (IL)

INTERNAL LANDSCAPE AREA INCLUDES ALL LANDSCAPE AREAS NOT INCLUDING SETBACKS, BUFFERS OR MOTOR VEHICLE ISLANDS.
100% SHRUB SUBSTITUTION FOR NON-RESIDENTIAL / 50% SHRUB SUBSTITUTION FOR MULTI-FAMILY.

NET SITE AREA (SF) (LESS PUBLIC ROW)	PERCENT MINIMUM INTERNAL AREA (%)	INTERNAL AREA (SF) REQ./PROV.	INTERNAL TREES (1/5000 SF) (EXCLUDING DRIVEWAYS)
364,133 SF	RESIDENTIAL 15%	54,620 SF/55,000 SF	110/73 (3 EXISTING)

SHRUB SUBSTITUTES REQ./PROV.	ORNAMENTAL GRASS SUB. REQ./PROV.	INTERNAL PLANT ABBR. DENOTED ON PLAN	PERCENT GROUND PLANE VEG. REQ./PROV.
310/310	0/0	IL	75%/75%

GREEN SPACE:	10% ACTIVE 5% NON-ACTIVE TOTAL	36,413 SF / 36,657 SF 18,207 SF / 18,207 SF 54,620 SF / 54,864 SF	DESIGN ELEMENTS: RAISED GARDEN, DOG PARK, TRAIL, PICNIC TABLES, BENCHES, TRASH CONTAINERS AND DOG POT STATIONS

LANDSCAPE BUFFERS AND SCREENS (LB)

STREET NAME OR PROPERTY LINE (ELEV.)	WIDTH (FT) REQ./PROV.	LINEAR FOOTAGE	BUFFER TREES (1/20') REQ./PROV.	EVERGREEN TREES REQ. (5/20') / PROVIDED
NORTHWEST	15/15 FT	300 LF	15/15	16/16 UPRIGHT EVERGREEN
NORTHEAST	15/15 FT	320 LF	16/16	8/8

LENGTH OF 6 FT. OPAQUE CEDAR WOOD FENCE REQ./PROV.

NORTH	300 LF
NORTH	320 LF

TRASH ENCLOSURE(S): SCREEN SHRUBS PROVIDED

TREE NOTE: ALL EXISTING TREES BEING USED TO MEET SITE LANDSCAPE REQUIREMENTS SHALL BE REPLACED IF NOT IN HEALTHY CONDITION.

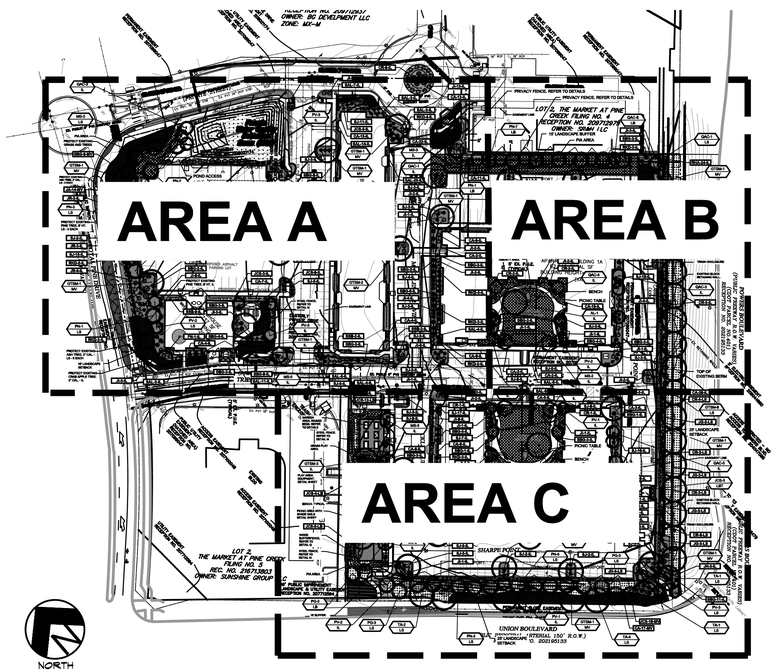

NORTH

OVERALL FINAL LANDSCAPE PLAN

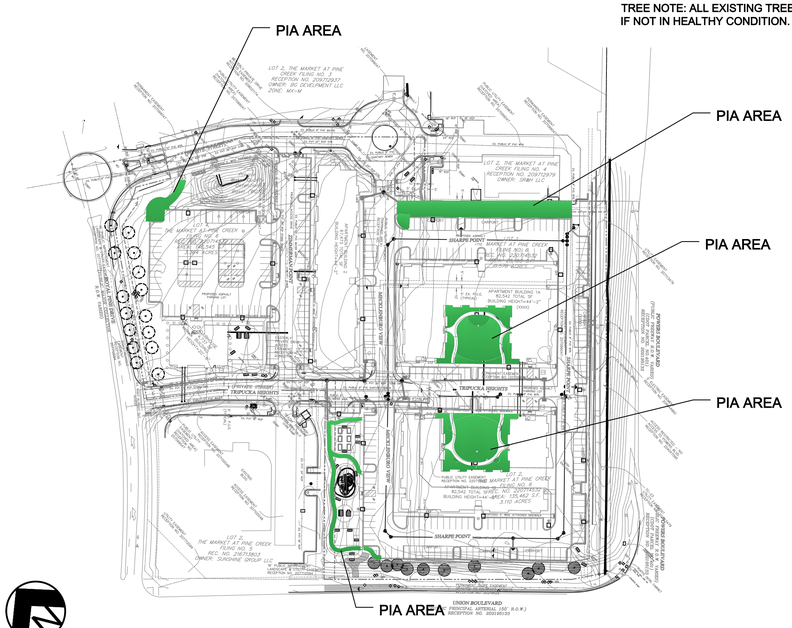

NORTH

PIA LOCATION PLAN

Know what's below. Call before you dig.

UTILITIES NOTE

VERIFY LOCATION AND DEPTH OF ALL UNDERGROUND UTILITIES PRIOR TO START OF WORK. CALL 811 FOR UTILITY LOCATES. TREE TRUNK PLACEMENT SHALL BE 6' MINIMUM DISTANCE FROM ANY GAS OR ELECTRIC AND 10' FROM GAS MAINS RATED AT 150PSI. FOR SANITARY SEWER AND WATER MAINLINES TREES SHALL NOT BE LOCATED WITHIN EASEMENTS AND WITHIN 15' OF ANY MAINLINE. ANY CONFLICT BETWEEN TREE LOCATIONS AND UTILITIES SHOWN ON PLANS SHALL BE RESOLVED WITH GENERAL CONTRACTOR PRIOR TO PLANTING. ALL ELECTRICAL VAULTS AND TRANSFORMERS SHALL BE KEPT CLEAR FROM PLANT MATERIAL PER COLORADO SPRINGS UTILITIES GUIDELINES 'LANDSCAPING AROUND ELECTRICAL EQUIPMENT'. SEE COLORADO SPRINGS UTILITIES CONSTRUCTION STANDARD DRAWINGS 18-302 FOR SPECIFIC CLEARANCE REQUIREMENTS. ALL SHRUBS TO BE LOCATED 3' CLEAR OF ALL FIRE HYDRANTS AT MATURE SIZE.

DOCUMENT NOTE

IRRESPECTIVE OF ANY OTHER TERM IN THIS DOCUMENT, LANDSCAPE ARCHITECT SHALL NOT CONTROL OR BE RESPONSIBLE FOR CONSTRUCTION MEANS, METHODS, TECHNIQUES, SCHEDULES, SEQUENCES OR PROCEDURES, OR FOR CONSTRUCTION SAFETY OR ANY OTHER RELATED PROGRAMS, OR FOR ANOTHER PARTIES' ERRORS OR OMISSIONS OR FOR ANOTHER PARTIES' FAILURE TO COMPLETE THEIR WORK OR SERVICES IN ACCORDANCE WITH LANDSCAPE ARCHITECT'S DOCUMENTS.

DEPN 23-0141

HIGHER GROUND DESIGNS, INC.
LANDSCAPE ARCHITECTURE, PLANNING & IRRIGATION DESIGN
5350 NORTH ACADEMY BLVD., STE. 207
COLORADO SPRINGS, CO 80918
Phone 719-477-1546
Fax 719-268-1122

HIGHER GROUND DESIGNS

THESE DRAWINGS ARE THE PROPERTY OF HIGHER GROUND DESIGNS, INC. AND SHALL NOT BE USED FOR ANY OTHER PURPOSE WITHOUT WRITTEN AUTHORIZATION BY HIGHER GROUND DESIGNS, INC. THESE DRAWINGS ARE NOT FOR CONSTRUCTION.

ROYAL PINE APARTMENTS
4150-4180 ROYAL PINE DRIVE
COLORADO SPRINGS, CO

PREPARED FOR:
DREXEL, BARRELL & CO.

CITY STAMP

NOT FOR CONSTRUCTION

JOB NUMBER 1129-23

REVISIONS

6-30-23	PER FINAL PLAN
8-11-23	PER CITY COMMENTS
9-7-23	PER DRB COMMENTS
9-11-23	PER DRB COMMENTS
9-26-23	PER CITY COMMENTS
10-25-23	PER CITY COMMENTS
11-16-23	PER CITY COMMENTS
12-11-23	PER CITY COMMENTS

ORIGINAL DATE 5-30-23

DRAWN BY JM

DESCRIPTION
FINAL
LANDSCAPE PLAN

SHEET NO.
17 OF 30

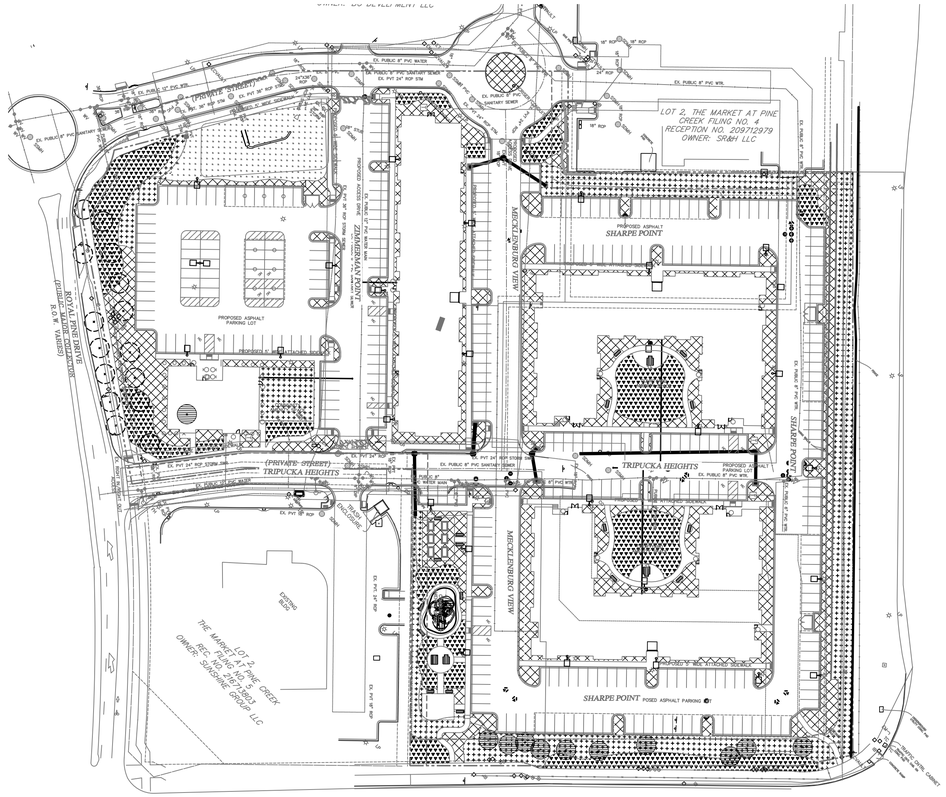

HYDROZONE DIAGRAM

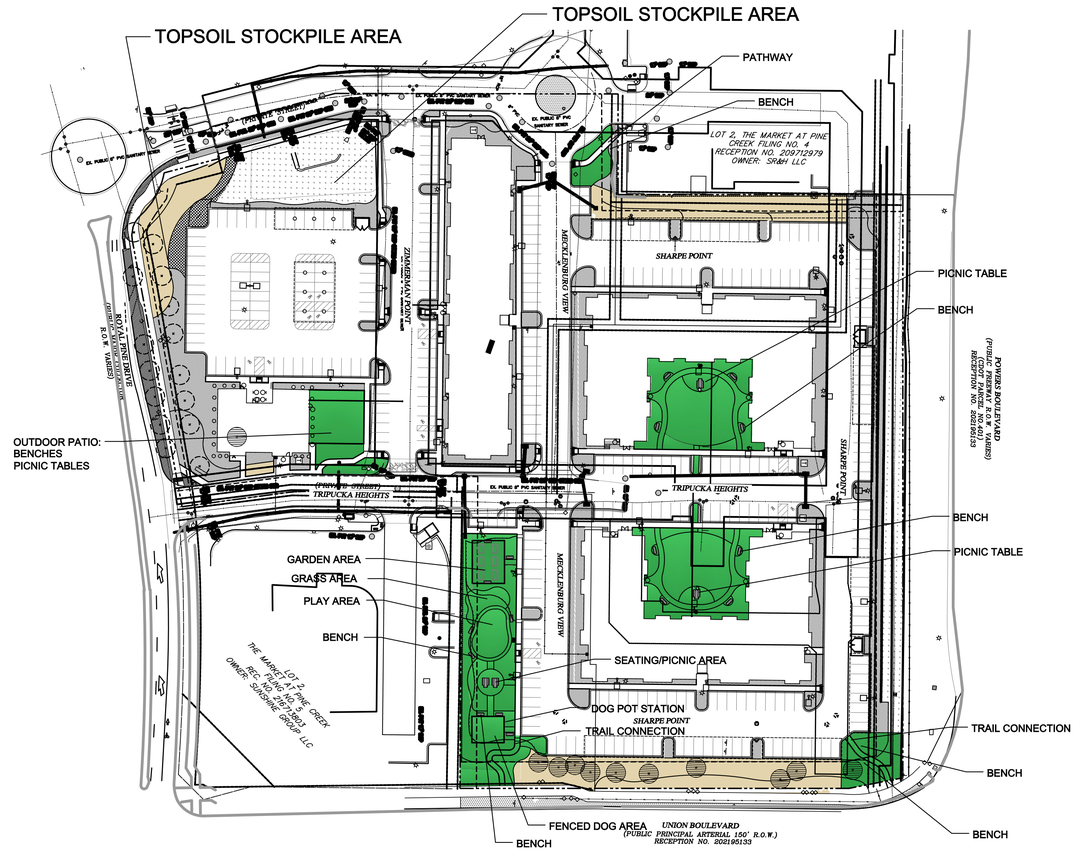

GREEN SPACE DIAGRAM

BENCH - DETAIL R, SHEET 23
PICNIC TABLE - DETAIL S, SHEET 23
SHADE SAIL - DETAIL T, SHEET 23
ALL OTHER AMENITIES THIS SHEET

WATER USE LEGEND

	APPROX. SF
HIGH WATER USE (H)	23,180
MEDIUM WATER USE (M)	43,719 SF
LOW WATER USE (L)	28,842 SF
TOTAL	95,741 SF

GREEN SPACE LEGEND

- ACTIVE GREEN SPACE (10%): 10% PROVIDED
- NON-ACTIVE GREEN SPACE (5%): 5% PROVIDED
- REFER TO CODE CHART FOR QUANTITIES

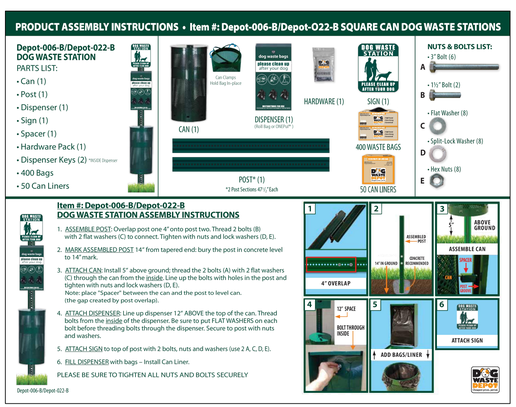

DOG POT STATION

BENCH AT PATIOS/DOG AREA

TRASH CONTAINER

RAISED GARDEN AREA

PICNIC TABLE

BENCH AT GREEN SPACE

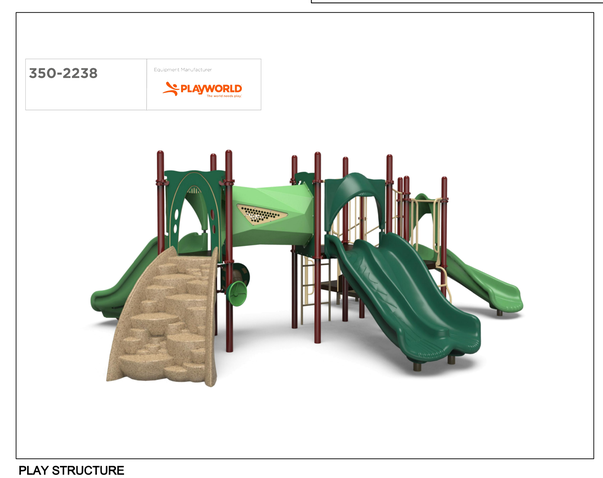

PLAY STRUCTURE

811 Know what's below. Call before you dig.

UTILITIES NOTE

VERIFY LOCATION AND DEPTH OF ALL UNDERGROUND UTILITIES PRIOR TO START OF WORK. CALL 811 FOR UTILITY LOCATES. TREE TRUNK PLACEMENT SHALL BE 8' MINIMUM DISTANCE FROM ANY GAS OR ELECTRIC AND 10' FROM GAS MAINS RATED AT 150PSI. FOR SANITARY SEWER AND WATER MAINLINES TREES SHALL NOT BE LOCATED WITHIN EASEMENTS AND WITHIN 15' OF ANY MAINLINE. ANY CONFLICT BETWEEN TREE LOCATIONS AND UTILITIES SHOWN ON PLANS SHALL BE RESOLVED WITH GENERAL CONTRACTOR PRIOR TO PLANTING. ALL ELECTRICAL VAULTS AND TRANSFORMERS SHALL BE KEPT CLEAR FROM PLANT MATERIAL PER COLORADO SPRINGS UTILITIES GUIDELINES "LANDSCAPING AROUND ELECTRICAL EQUIPMENT". SEE COLORADO SPRINGS UTILITIES CONSTRUCTION STANDARD DRAWINGS 18-302 FOR SPECIFIC CLEARANCE REQUIREMENTS. ALL SHRUBS TO BE LOCATED 3' CLEAR OF ALL FIRE HYDRANTS AT MATURE SIZE.

DOCUMENT NOTE

IRRESPECTIVE OF ANY OTHER TERM IN THIS DOCUMENT, LANDSCAPE ARCHITECT SHALL NOT CONTROL OR BE RESPONSIBLE FOR CONSTRUCTION MEANS, METHODS, TECHNIQUES, SCHEDULES, SEQUENCES OR PROCEDURES, OR FOR CONSTRUCTION SAFETY OR ANY OTHER RELATED PROGRAMS, OR FOR ANOTHER PARTIES' ERRORS OR OMISSIONS OR FOR ANOTHER PARTIES' FAILURE TO COMPLETE THEIR WORK OR SERVICES IN ACCORDANCE WITH LANDSCAPE ARCHITECT'S DOCUMENTS.

DEPN 23-0141

HIGHER GROUND DESIGNS, INC.
LANDSCAPE ARCHITECTURE, PLANNING & IRRIGATION DESIGN
5350 NORTH ACADEMY BLVD., STE. 207
COLORADO SPRINGS, CO 80918
Phone 719-477-1646
Fax 719-268-1122

HIGHER GROUND DESIGNS

ROYAL PINE APARTMENTS
4150-4180 ROYAL PINE DRIVE
COLORADO SPRINGS, CO

THESE DRAWINGS ARE THE PROPERTY OF HIGHER GROUND DESIGNS, INC. AND SHALL NOT BE USED FOR ANY OTHER PURPOSE WITHOUT WRITTEN AUTHORIZATION BY HIGHER GROUND DESIGNS, INC. THESE DRAWINGS ARE NOT FOR CONSTRUCTION.

PREPARED FOR:
DREXEL, BARRELL & CO.

CITY STAMP

NOT FOR CONSTRUCTION

JOB NUMBER 1129-23

REVISIONS

6-30-23	PER FINAL PLAN
8-11-23	PER CITY COMMENTS
9-7-23	PER DRB COMMENTS
9-11-23	PER DRB COMMENTS
9-26-23	PER CITY COMMENTS
10-25-23	PER CITY COMMENTS
11-16-23	PER CITY COMMENTS
12-11-23	PER CITY COMMENTS

ORIGINAL DATE 5-30-23
DRAWN BY JM
DESCRIPTION FINAL LANDSCAPE PLAN

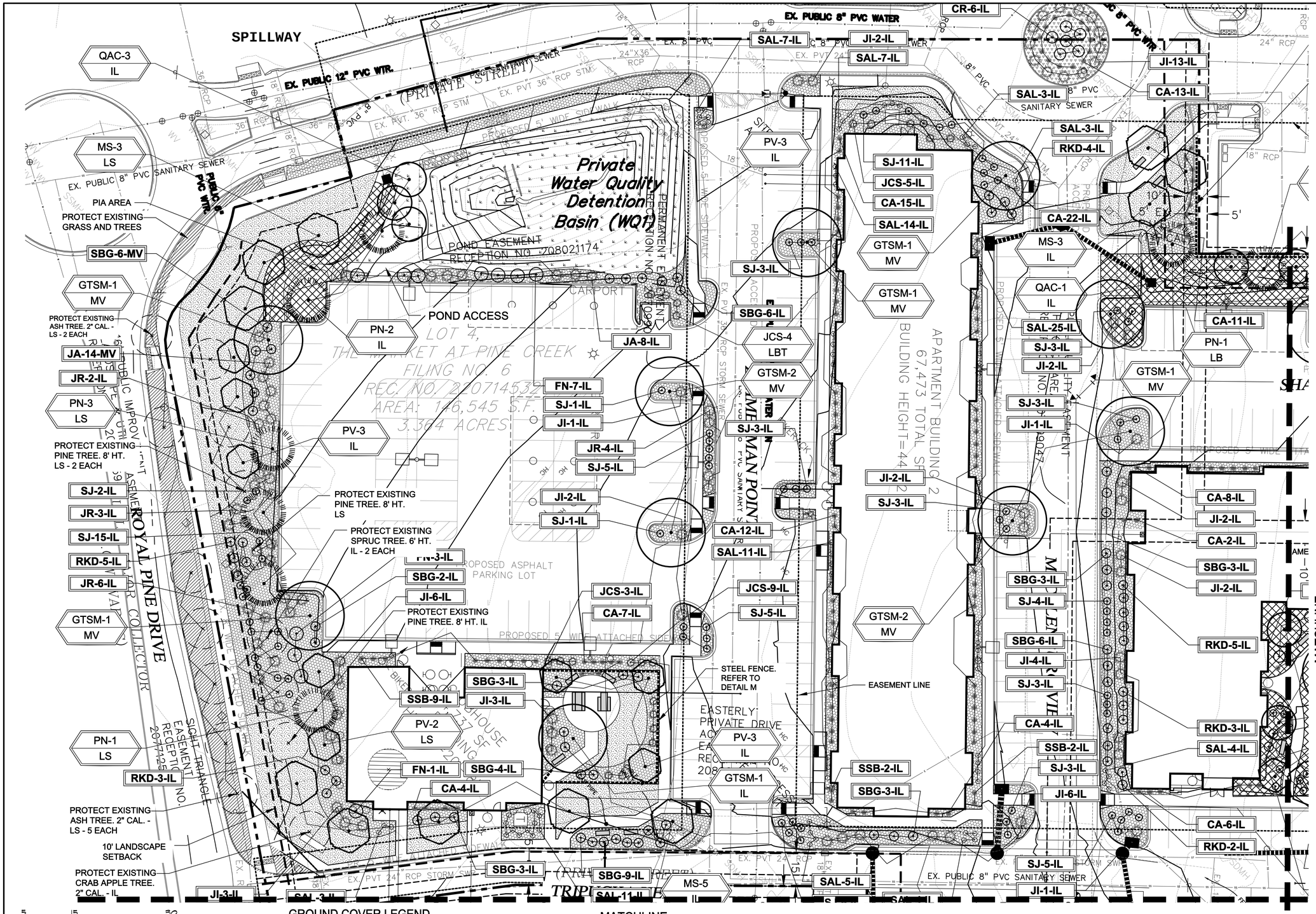

GROUND COVER LEGEND

- Turf type Irrigated Seed Grass Mix 'A' or approved equal
- Denver Granite Decorative Rock: 3/4" Diameter (with weed barrie
- Synthetic Turf or Concrete Patio
- Irrigated Seed Grass Mix 'C' All Purpose Mix
- PIA AREAS: PIA AREAS CONSIST OF ROCK, GRASS, NATIVE SEED MIX 'C', AND PAVING. REFER TO CONSTRUCTION DRAWINGS FOR SPECIFIC TREATMENT TYPE AND SF.

811 Know what's below. Call before you dig.

UTILITIES NOTE

VERIFY LOCATION AND DEPTH OF ALL UNDERGROUND UTILITIES PRIOR TO START OF WORK. CALL 811 FOR UTILITY LOCATES. TREE TRUNK PLACEMENT SHALL BE 8' MINIMUM DISTANCE FROM ANY GAS OR ELECTRIC AND 10' FROM GAS MAINS RATED AT 150PSI. FOR SANITARY SEWER AND WATER MAINLINES TREES SHALL NOT BE LOCATED WITHIN EASEMENTS AND WITHIN 15' OF ANY MAINLINE. ANY CONFLICT BETWEEN TREE LOCATIONS AND UTILITIES SHOWN ON PLANS SHALL BE RESOLVED WITH GENERAL CONTRACTOR PRIOR TO PLANTING. ALL ELECTRICAL VAULTS AND TRANSFORMERS SHALL BE KEPT CLEAR FROM PLANT MATERIAL PER COLORADO SPRINGS UTILITIES GUIDELINES "LANDSCAPING AROUND ELECTRICAL EQUIPMENT". SEE COLORADO SPRINGS UTILITIES CONSTRUCTION STANDARD DRAWINGS 18-302 FOR SPECIFIC CLEARANCE REQUIREMENTS. ALL SHRUBS TO BE LOCATED 3' CLEAR OF ALL FIRE HYDRANTS AT MATURE SIZE.

DOCUMENT NOTE

IRRESPECTIVE OF ANY OTHER TERM IN THIS DOCUMENT, LANDSCAPE ARCHITECT SHALL NOT CONTROL OR BE RESPONSIBLE FOR CONSTRUCTION MEANS, METHODS, TECHNIQUES, SCHEDULES, SEQUENCES OR PROCEDURES, OR FOR CONSTRUCTION SAFETY OR ANY OTHER RELATED PROGRAMS, OR FOR ANOTHER PARTIES' ERRORS OR OMISSIONS OR FOR ANOTHER PARTIES' FAILURE TO COMPLETE THEIR WORK OR SERVICES IN ACCORDANCE WITH LANDSCAPE ARCHITECT'S DOCUMENTS.

FINAL LANDSCAPE PLAN - AREA 'A'

DEPN 23-0141

HIGHER GROUND DESIGNS, INC.
LANDSCAPE ARCHITECTURE, PLANNING & IRRIGATION DESIGN
5350 NORTH ACADEMY BLVD., STE. 207
COLORADO SPRINGS, CO 80918
Phone 719-477-1946
Fax 719-268-1122

HIGHER GROUND DESIGNS

THESE DRAWINGS ARE THE PROPERTY OF HIGHER GROUND DESIGNS, INC. AND SHALL NOT BE USED FOR ANY OTHER PURPOSE WITHOUT WRITTEN AUTHORIZATION BY HIGHER GROUND DESIGNS, INC. THESE DRAWINGS ARE NOT FOR CONSTRUCTION.

ROYAL PINE APARTMENTS

4150-4180 ROYAL PINE DRIVE
COLORADO SPRINGS, CO

PREPARED FOR:
DREXEL, BARRELL & CO.

CITY STAMP

NOT FOR CONSTRUCTION

JOB NUMBER 1129-23

REVISIONS

6-30-23	PER FINAL PLAN
8-11-23	PER CITY COMMENTS
9-7-23	PER DRB COMMENTS
9-11-23	PER DRB COMMENTS
9-26-23	PER CITY COMMENTS
10-25-23	PER CITY COMMENTS
11-16-23	PER CITY COMMENTS
12-11-23	PER CITY COMMENTS

ORIGINAL DATE 5-30-23
DRAWN BY JM
DESCRIPTION FINAL LANDSCAPE PLAN-AREA A

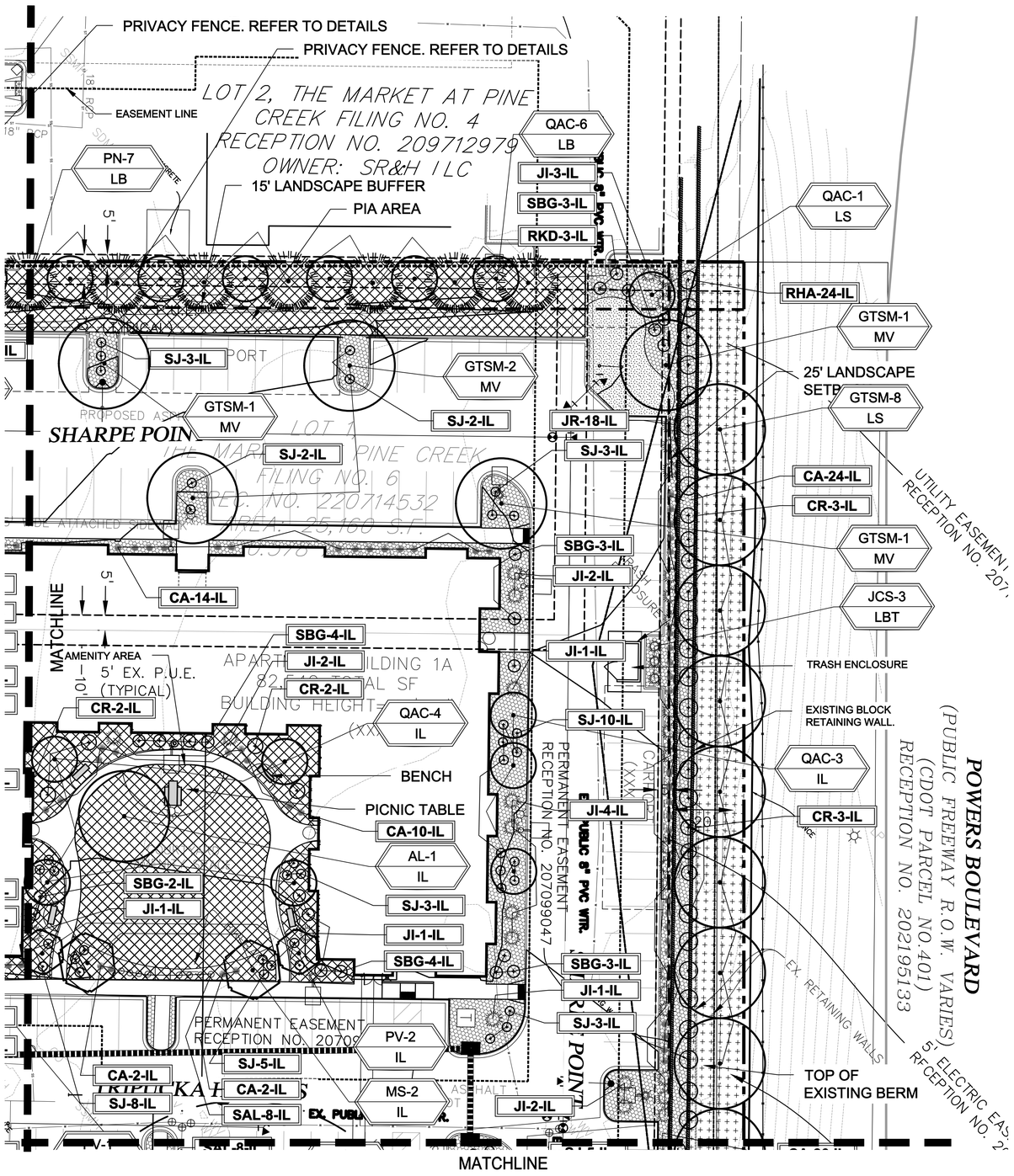

FINAL LANDSCAPE PLAN - AREA 'B'

NORTH

5 15 30
10 20 SCALE 1"= 20'

Know what's below. Call before you dig.

PLANT SCHEDULE

Symbol	Abbr.	Quanity	Botanical Name	Common Name	Mature Size	Planting Size	UDC Requirement	Container Size
EVERGREEN TREES:								
**	PG	9	Picea pungens glauca 'Blue Colorado'	Colorado Blue Spruce	20'x45'	B & B 8' ht.	SCREEN, WALL, TRASH	B & B
**	PN	22	Pinus nigra	Austrian Pine	20'x45'	8' ht.	SCREEN, WALL, TRASH	B & B
**	JCS	16	Juniperus x chinensis 'Spartan'	Spartan Juniper	3-4' x 12-15'	6' HT.	SCREEN, WALL, TRASH	
DECIDUOUS TREES:								
**	AL	2	Acer platanoides	Norway Maple (European)	30'X30'	B & B 2-1/2"cal.	PARK, ROW	B & B
**	GTSM	43	Gleditsia triacanthos 'Shademaster'	Shademaster Honeylocust	30'X30'	2-1/2"cal.	PARK, ROW, MEDIAN	B & B
**	QAC	27	Quercus albex Q. robur 'Crimschmidt'	Crimson Spire Oak	15' x 45'	2-1/2"cal.	NA	B & B
**	MS	20	Malus 'Spring Snow'	Spring Snow Crabapple	15'X15'	2"cal.	ROW, MEDIAN, STREAM	B & B
**	PV	18	Prunus virginiana 'Schubert'	Canada Red Cherry	15'X15'	2"cal.	ROW, MEDIAN, STREAM	B & B
**	TA	8	Tilia americana	Little Leaflinden	30'x25'	2-1/2"cal.	ROW	B & B
TOTAL TREES: Selected Species-70% Min. (153/126= 82% PROVIDED)								
EVERGREEN SHRUBS:								
**	JA	22	Juniperus chinensis 'Armstrong'	Armstrong Juniper	3-4' x 3-4'	Container # 5	SCREEN, WALL	Container
**	JCS	50	Juniperus x chinensis 'Spartan'	Spartan Juniper	3-4' x 12-15'	6' HT.	SCREEN, WALL, TRASH	Container
**	JG	14	Juniperus x chinensis 'Sea Green'	Sea Green Juniper	6-8' x 6'	# 5	SCREEN, WALL	Container
**	JI	97	Juniperus sabina	Buffalo Juniper	6-8' x 12-18"	# 5	NA	Container
	JR	33	Juniperus horizontalis 'Wiltonii'	Blue Rug Juniper	6-8' x 6-8"	# 5	NA	Container
**	JH	7	Juniperus horizontalis 'Blue Chip'	Blue Chip Juniper	3-5' x 8-10"	# 5	NA	Container
DECIDUOUS SHRUBS:								
**	CR	32	Cornus stolonifera 'Redtwig'	Red Twig Dogwood	6-10' x 8-10'	Container # 5	SCREEN, SCREEN, TRASH	Container
**	FN	11	Forestiera neomexicana	New Mexico Privet	8-12' x 4-5'	# 5	SCREEN, SCREEN, TRASH	Container
**	RHA	24	Rhus aromatica 'Gro-low'	Sumac Gro-Low	5-7' x 2-3'	# 5	NA	Container
**	RKD	30	Rosa x double knockout 'Radtko'	Double Knockout Rose	3-4' x 3-4'	# 5	NA	Container
**	SBG	107	Spiraea x bumalda 'Goldflame'	Goldflame Spirea	3-4' x 2-3'	# 5	SCREEN, SCREEN, TRASH	Container
**	SJ	212	Spiraea japonica 'Majic Carpet'	Majic Carpet, Spirea	1-2' x 1-2'	# 5	SCREEN, SCREEN, TRASH	Container
TOTAL SHRUBS: Selected Species-70% Min. / 70% PROVIDED								
ORNAMENTAL GRASSES AND PERENNIALS:								
	CA	263	Calamagrostis acutiflora 'Karl Foerster'	Feather Reed Grass	1-3' / 2-3'	Container #5 cont.	SCREEN	Container
	SSB	13	Schizachycium scoparium 'Blaze'	Little Bluestem Grass 'Blaze'	2-3' x 2-3'	#5 cont.		Container
TOTAL ORNAMENTAL GRASSES: Selected Species-70% Min./ 100% Provided								
	SAL	123	Salvia nemorosa 'May Night'	May Night Salvia	24 x 24"	#1 CONT.		Container

NOTE: QUANTITIES SHOWN IN SCHEDULE ARE FOR CONVENIENCE ONLY.
CONTRACTOR IS RESPONSIBLE FOR INSTALLING ALL MATERIALS PER PLAN.

GROUND COVER LEGEND

SYMBOL	DESCRIPTION	APPROX. SF
	Turf type Irrigated Seed Grass Mix 'A' or approved equal OR Kentucky Bluegrass Sod	23,308 SF
	Denver Granite Decorative Rock: 3/4" Diameter (with weed barrier) Submit sample/spec prior to ordering material	47,513 SF
	Pea Gravel Rock: 6" depth (with weed barrier) Submit sample/spec prior to ordering material	741 SF
	Arkansas Tan Cobble: 2-4" Diameter (with weed barrier) Submit sample/spec prior to ordering material	3,928 SF
	Engineered Wood Fiber for play area: 12" depth Submit sample/spec prior to ordering material	1,141 SF
	Irrigated Seed Grass Mix 'B' Low Grow Mix Submit sample/spec prior to ordering material	14,409 SF
	Irrigated Seed Grass Mix 'C' All Purpose Mix Submit sample/spec prior to ordering material	8,258 SF
	PIA AREAS: PIA AREAS CONSIST OF ROCK, GRASS, NATIVE SEED MIX 'C', AND PAVING. REFER TO CONSTRUCTION DRAWINGS FOR SPECIFIC TREATMENT TYPE AND SF.	23,357 SF
	Decorative Boulders: Broadmoor or Denver Granite Large: 36" L x 24" HT. x 24" W Small: 24" L x 18" HT. x 18" W	
	4-8" Dia. Arkansas Tan Cobble Edge between rock types	
	Steel Edger	
	Remove All Existing Siberian Elm Tree	

NOTE: QUANTITIES SHOWN IN SCHEDULE ARE FOR CONVENIENCE ONLY.
CONTRACTOR IS RESPONSIBLE FOR INSTALLING ALL MATERIALS PER PLAN.

GRADE NOTE

GRADE SHALL BE ESTABLISHED BASED ON GRADING PLAN BY OTHERS, AND FOR LANDSCAPE MATERIALS PER PLAN. FINAL SOIL GRADE FOR 5-12" DIAMETER ROCK AREAS SHALL BE 4" BELOW TOP OF SIDEWALK/CURB/PAVING. AT ALL OTHER ROCK AREAS GRADE SHALL BE 3" BELOW SIDEWALK/CURB. AT SOD/SEED AREAS GRADE SHALL BE 1" BELOW TOP OF SIDEWALK/CURB.

UTILITIES NOTE

VERIFY LOCATION AND DEPTH OF ALL UNDERGROUND UTILITIES PRIOR TO START OF WORK. CALL 811 FOR UTILITY LOCATES. TREE TRUNK PLACEMENT SHALL BE 6' MINIMUM DISTANCE FROM ANY GAS OR ELECTRIC AND 10' FROM GAS MAINS RATED AT 150PSI. FOR SANITARY SEWER AND WATER MAINLINES TREES SHALL NOT BE LOCATED WITHIN EASEMENTS AND WITHIN 15' OF ANY MAINLINE. ANY CONFLICT BETWEEN TREE LOCATIONS AND UTILITIES SHOWN ON PLANS SHALL BE RESOLVED WITH GENERAL CONTRACTOR PRIOR TO PLANTING. ALL ELECTRICAL VAULTS AND TRANSFORMERS SHALL BE KEPT CLEAR FROM PLANT MATERIAL PER COLORADO SPRINGS UTILITIES GUIDELINES "LANDSCAPING AROUND ELECTRICAL EQUIPMENT". SEE COLORADO SPRINGS UTILITIES CONSTRUCTION STANDARD DRAWINGS 18-302 FOR SPECIFIC CLEARANCE REQUIREMENTS. ALL SHRUBS TO BE LOCATED 3' CLEAR OF ALL FIRE HYDRANTS AT MATURE SIZE.

DOCUMENT NOTE

IRRESPECTIVE OF ANY OTHER TERM IN THIS DOCUMENT, LANDSCAPE ARCHITECT SHALL NOT CONTROL OR BE RESPONSIBLE FOR CONSTRUCTION MEANS, METHODS, TECHNIQUES, SCHEDULES, SEQUENCES OR PROCEDURES, OR FOR CONSTRUCTION SAFETY OR ANY OTHER RELATED PROGRAMS, OR FOR ANOTHER PARTIES' ERRORS OR OMISSIONS OR FOR ANOTHER PARTIES' FAILURE TO COMPLETE THEIR WORK OR SERVICES IN ACCORDANCE WITH LANDSCAPE ARCHITECT'S DOCUMENTS.

DEPN 23-0141

HIGHER GROUND DESIGNS, INC.
LANDSCAPE ARCHITECTURE, PLANNING & IRRIGATION DESIGN
5350 NORTH ACADEMY BLVD., STE. 207
COLORADO SPRINGS, CO 80918
Phone 719-477-1646
Fax 719-268-1122

HIGHER GROUND DESIGNS

THESE DRAWINGS ARE THE PROPERTY OF HIGHER GROUND DESIGNS, INC. AND SHALL NOT BE USED FOR ANY OTHER PURPOSE WITHOUT WRITTEN AUTHORIZATION BY HIGHER GROUND DESIGNS, INC. THESE DRAWINGS ARE NOT FOR CONSTRUCTION.

ROYAL PINE APARTMENTS
4150-4180 ROYAL PINE DRIVE
COLORADO SPRINGS, CO

PREPARED FOR:
DREXEL, BARRELL & CO.

CITY STAMP

NOT FOR CONSTRUCTION

JOB NUMBER 1129-23

REVISIONS

6-30-23	PER FINAL PLAN
8-11-23	PER CITY COMMENTS
9-7-23	PER DRB COMMENTS
9-11-23	PER DRB COMMENTS
9-26-23	PER CITY COMMENTS
10-25-23	PER CITY COMMENTS
11-16-23	PER CITY COMMENTS
12-11-23	PER CITY COMMENTS

ORIGINAL DATE 5-30-23

DRAWN BY JM

DESCRIPTION
FINAL LANDSCAPE PLAN-AREA B

SHEET NO.
20 OF 30

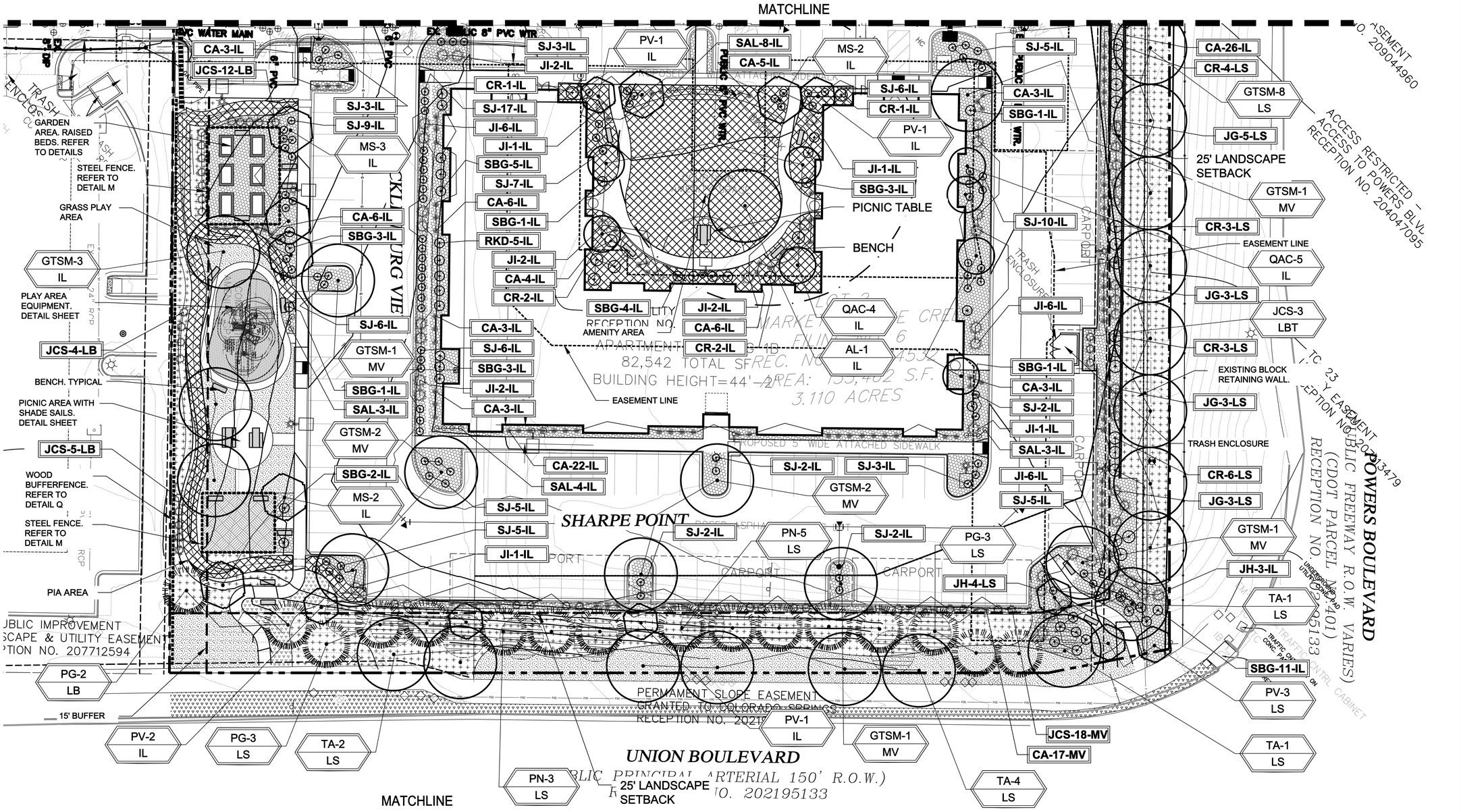

FINAL LANDSCAPE PLAN - AREA 'C'

NORTH

5 15 30

10 20 SCALE 1"= 20'

GROUND COVER LEGEND

SYMBOL	DESCRIPTION
	Turf type Irrigated Seed Grass Mix 'A' or approved equal OR Kentucky Bluegrass Sod
	Denver Granite Decorative Rock: 3/4" Diameter (with weed barrier)
	Pea Gravel Rock: 6" depth (with weed barrier)
	Arkansas Tan Cobble: 2-4" Diameter (with weed barrier)
	Irrigated Seed Grass Mix 'B' Low Grow Mix
	Engineered Wood Fiber for play area: 12" depth
	PIA AREAS: PIA AREAS CONSIST OF ROCK, GRASS, NATIVE SEED MIX 'C', AND PAVING. REFER TO CONSTRUCTION DRAWINGS FOR SPECIFIC TREATMENT TYPE AND SF.

811 Know what's below. Call before you dig.

UTILITIES NOTE

VERIFY LOCATION AND DEPTH OF ALL UNDERGROUND UTILITIES PRIOR TO START OF WORK. CALL 811 FOR UTILITY LOCATES. TREE TRUNK PLACEMENT SHALL BE 6' MINIMUM DISTANCE FROM ANY GAS OR ELECTRIC AND 10' FROM GAS MAINS RATED AT 150PSI. FOR SANITARY SEWER AND WATER MAINLINES TREES SHALL NOT BE LOCATED WITHIN EASEMENTS AND WITHIN 15' OF ANY MAINLINE. ANY CONFLICT BETWEEN TREE LOCATIONS AND UTILITIES SHOWN ON PLANS SHALL BE RESOLVED WITH GENERAL CONTRACTOR PRIOR TO PLANTING. ALL ELECTRICAL VAULTS AND TRANSFORMERS SHALL BE KEPT CLEAR FROM PLANT MATERIAL PER COLORADO SPRINGS UTILITIES GUIDELINES "LANDSCAPING AROUND ELECTRICAL EQUIPMENT". SEE COLORADO SPRINGS UTILITIES CONSTRUCTION STANDARD DRAWINGS 18-302 FOR SPECIFIC CLEARANCE REQUIREMENTS. ALL SHRUBS TO BE LOCATED 3' CLEAR OF ALL FIRE HYDRANTS AT MATURE SIZE.

DOCUMENT NOTE

IRRESPECTIVE OF ANY OTHER TERM IN THIS DOCUMENT, LANDSCAPE ARCHITECT SHALL NOT CONTROL OR BE RESPONSIBLE FOR CONSTRUCTION MEANS, METHODS, TECHNIQUES, SCHEDULES, SEQUENCES OR PROCEDURES, OR FOR CONSTRUCTION SAFETY OR ANY OTHER RELATED PROGRAMS, OR FOR ANOTHER PARTIES' ERRORS OR OMISSIONS OR FOR ANOTHER PARTIES' FAILURE TO COMPLETE THEIR WORK OR SERVICES IN ACCORDANCE WITH LANDSCAPE ARCHITECT'S DOCUMENTS.

DEPN 23-0141

CITY STAMP

NOT FOR CONSTRUCTION

HIGHER GROUND DESIGNS, INC.
LANDSCAPE ARCHITECTURE, PLANNING & IRRIGATION DESIGN
5350 NORTH ACADEMY BLVD., STE. 207
COLORADO SPRINGS, CO 80918
Phone 719-477-1546
Fax 719-268-1122

HIGHER GROUND DESIGNS

ROYAL PINE APARTMENTS
4150-4180 ROYAL PINE DRIVE
COLORADO SPRINGS, CO

PREPARED FOR:
DREXEL, BARRELL & CO.

THESE DRAWINGS ARE THE PROPERTY OF HIGHER GROUND DESIGNS, INC. AND SHALL NOT BE USED FOR ANY OTHER PURPOSE WITHOUT WRITTEN AUTHORIZATION BY HIGHER GROUND DESIGNS, INC. THESE DRAWINGS ARE NOT FOR CONSTRUCTION.

JOB NUMBER 1129-23

REVISIONS

6-30-23	PER FINAL PLAN
8-11-23	PER CITY COMMENTS
9-7-23	PER DRB COMMENTS
9-11-23	PER DRB COMMENTS
9-26-23	PER CITY COMMENTS
10-25-23	PER CITY COMMENTS
11-16-23	PER CITY COMMENTS
12-11-23	PER CITY COMMENTS

ORIGINAL DATE 5-30-23

DRAWN BY JM

DESCRIPTION FINAL LANDSCAPE PLAN-AREA C

SHEET NO. 21 OF 30

GENERAL SITE NOTES

1. CONTRACTOR RESPONSIBLE FOR COORDINATING AND INSTALLING ALL SLEEVING REQUIRED FOR SITE CONSTRUCTION INCLUDING BUT NOT LIMITED TO DRAINAGE, IRRIGATION, LIGHTING, AND ELECTRICAL. COORDINATE WITH GENERAL CONTRACTOR.
2. THE CONTRACTOR IS SPECIFICALLY CAUTIONED THAT THE LOCATION AND/OR ELEVATION OF EXISTING UTILITIES, AS SHOWN ON THESE PLANS, IS BASED ON RECORDS OF THE VARIOUS UTILITY COMPANIES AND, WHERE POSSIBLE, MEASUREMENTS TAKEN IN THE FIELD. THE INFORMATION IS NOT TO BE RELIED UPON AS BEING EXACT OR COMPLETE. THE CONTRACTOR MUST CALL THE LOCAL UTILITY LOCATION CENTER AT LEAST 48 HOURS BEFORE ANY EXCAVATION TO REQUEST EXACT FIELD LOCATIONS OF THE UTILITIES. PRIOR TO CONSTRUCTION, THE CONTRACTOR SHALL VERIFY PERTINENT LOCATIONS AND ELEVATIONS, ESPECIALLY AT CONNECTION POINTS AND AT POTENTIAL UTILITY CONFLICTS. IT SHALL BE THE RESPONSIBILITY OF THE CONTRACTOR TO RELOCATE ALL EXISTING UTILITIES THAT CONFLICT WITH THE PROPOSED IMPROVEMENTS SHOWN ON THESE PLANS.
3. THE CONTRACTOR SHALL BE RESPONSIBLE FOR OBTAINING ALL NECESSARY PERMITS FOR ALL APPLICABLE AGENCIES.
4. ALL MATERIALS, WORKMANSHIP, AND CONSTRUCTION OF PUBLIC IMPROVEMENTS SHALL MEET OR EXCEED THE STANDARDS AND SPECIFICATIONS SET FORTH IN CITY OF COLORADO SPRINGS STANDARDS AND SPECIFICATIONS AND APPLICABLE STATE AND FEDERAL REGULATIONS. WHERE THERE IS CONFLICT BETWEEN THESE PLANS AND THE SPECIFICATIONS, OR ANY APPLICABLE STANDARDS, THE HIGHER QUALITY STANDARD SHALL APPLY. ALL WORK SHALL BE INSPECTED AND APPROVED BY THE APPROPRIATE GOVERNING AGENCIES.
5. THE CONTRACTOR SHALL HAVE ONE (1) SIGNED COPY OF THE APPROVED CONSTRUCTION DOCUMENTS, ONE (1) COPY OF THE APPROPRIATE STANDARDS AND SPECIFICATIONS, AND A COPY OF ANY PERMITS AND EXTENSION AGREEMENTS NEEDED FOR THE JOB, ON-SITE AT ALL TIMES.
6. ALL REFERENCES TO ANY PUBLISHED STANDARDS SHALL REFER TO THE LATEST REVISION OF SAID STANDARD, UNLESS SPECIFICALLY STATED OTHERWISE.
7. THE CONTRACTOR SHALL BE RESPONSIBLE FOR KEEPING ROADWAYS FREE AND CLEAR OF ALL CONSTRUCTION DEBRIS TRACKED FROM THE SITE.

LAYOUT NOTE

CONTRACTOR IS RESPONSIBLE FOR INSTALLING ALL LANDSCAPE SHOWN ON THIS PLAN. ANY DEVIATIONS FROM THIS PLAN ARE TO BE APPROVED BY OWNER'S REPRESENTATIVE OR LANDSCAPE ARCHITECT. DEVIATIONS FROM THE APPROVED PLAN MAY REQUIRE APPROVAL BY COLORADO SPRINGS PLANNING AND OWNER REPRESENTATIVE.

INSTALLATION NOTES

REMOVE EXISTING TREES, DEBRIS AND WEEDS FROM SITE PRIOR TO CONSTRUCTION (AS SHOWN PER PLAN).

LANDSCAPE CONTRACTOR IS RESPONSIBLE FOR MAINTAINING THE SITE DURING CONSTRUCTION. WEEDS AND TRASH SHALL BE REMOVED DAILY AS REQUIRED.

EXISTING TOPSOIL TO BE STOCKPILED ON-SITE AND USED DURING CONSTRUCTION TO ESTABLISH GRADES WITHIN LANDSCAPE AREAS AS SHOWN PER PLAN.

CONTRACTOR SHALL REFER TO ASSOCIATED LANDSCAPE CONTRACTORS OF COLORADO HANDBOOK (ALCC) , 2007 REVISED EDITION FOR ALL CONSTRUCTION FOR THIS SITE. CONTACT OWNER/LANDSCAPE ARCHITECT FOR QUESTIONS.

QUANTITIES SHOWN IN PLANT SCHEDULE ARE FOR CONVENIENCE ONLY. CONTRACTOR IS RESPONSIBLE FOR INSTALLING ALL PLANT MATERIAL PER PLAN.

LANDSCAPE ARCHITECT SHALL HAVE OPPORTUNITY TO INSPECT AND APPROVE ALL TREES AND ALL 1-15 GALLON MATERIAL AT JOB SITE PRIOR TO PLANTING, INCLUDING PLACEMENT INSPECTION.

STEEL EDGING TO BE GREEN PRO-STEEL (1/8" x 4" x 10') WITH STAKES OR APPROVED EQUAL. EDGING TO BE EXPOSED 1/2" MAXIMUM ABOVE FINISHED GRADES. INSTALL PER MANUFACTURE RECOMMENDATIONS. SEE PLAN FOR EDGING LOCATIONS.

ALL ROCK COVER AREAS ONLY TO BE PREPARED WITH 3 OZ PROFESSIONAL GRADE POLYSPUN WEED BARRIER WITH STAPLES AT 5' O.C. FABRIC SEAMS TO BE OVERLAPPED 6" MIN. AND SECURED WITH STAPLES.

GROUND COVER SHALL BE CONTINUOUS UNDER ALL SHRUBS THROUGHOUT PROJECT SITE. REFER TO PLANTING DETAILS.

TREES AND SHRUBS TO RECEIVE ORGANIC MULCH PER DETAILS, INCLUDING ROCK AREAS-SEE DETAILS, UNLESS OTHERWISE SPECIFIED. ORGANIC MULCH TO BE 'CASCADE CEDAR' WITH NO LANDSCAPE FABRIC 4" DEPTH.

DO NOT PLANT SHRUBS OR TREES OF INCOMPATIBLE WATER REQUIREMENTS IMMEDIATELY ADJACENT (MINIMUM 5') TO ONE ANOTHER.

PLANT BACKFILL SHALL BE 70% NATIVE ON-SITE SOIL, AND 30% BREW-GRO BIOCOMP CLASS 1 (OR CITY APPROVED EQUAL).

A REPRESENTATIVE SAMPLE OF THE BOTANICAL NAME TAGS, FURNISHED BY THE NURSERY STOCK PROVIDER SHALL REMAIN ATTACHED TO THE PLANTS UNTIL FINAL INSPECTION.

LANDSCAPE CONTRACTOR SHALL NOTIFY LANDSCAPE ARCHITECT IF STORM DRAINAGE FROM ADJACENT LANDSCAPE AREAS OR BUILDING DOWNSPOUTS WILL ADVERSELY AFFECT LANDSCAPED AREAS PER THE PLAN.

PRIOR TO INSTALLING PLANTS OR GROUND COVER BROADCAST (PLANT SAFE) PREEN WEED PRE-EMERGENT, OR APPROVED EQUAL, IN ALL PLANTING AREAS PER MANUFACTURE RECOMMENDATIONS. WWW.PREEN.COM

CITY AFFIDAVIT NOTE

THE DESIGN PROFESSIONAL OF RECORD IS TO COMPLETE THE INSPECTION AFFIDAVIT BASED ON CITY APPROVED FINAL LANDSCAPE PLAN AND CONSTRUCTION DRAWINGS BY HGD, INC. IF ANY DISCREPANCY BETWEEN APPROVED FINAL LANDSCAPE PLAN AND CONSTRUCTION DRAWINGS EXIST THE CONSTRUCTION DRAWINGS SHALL TAKE PRECEDENT. THIS REQUIRES CONSTRUCTION OBSERVATION VISITS TO ACCURATELY COMPLETE THE AFFIDAVIT. WHEN AFFIDAVITS ARE NOT SUBMITTED FINANCIAL ASSURANCES ARE TAKEN AND HELD FOR TWO YEARS. REGARDLESS, NATIVE SEED AREAS REQUIRE A TWO YEAR ESTABLISHMENT FINANCIAL ASSURANCE.

ACCEPTABLE FIELD CHANGES INCLUDE BUT ARE NOT LIMITED TO: COMPARABLE PLANT SUBSTITUTES (I.E. APPROXIMATELY 2 TREES, 10 SHRUBS) IN ACCORD WITH THE CITY PLANT LIST; SHORT RETAINING WALL EXTENSIONS WHICH DO NOT ENCROACH INTO EASEMENTS OR CONFLICT WITH I.E. DRAINAGE OR A UTILITY; A CHANGE IN PLANT SIZE BUT SILL MEETS CITY MINIMUM SIXE REQUIREMENT, AND ARE NOT REQUIRED AS PART OF ANY SPECIAL PLAN APPROVAL AGREEMENT OR STANDARD. WHEN MINOR LANDSCAPE CHANGES ACCUMULATE OR LARGE CHANGES OCCUR FROM THE APPROVED PLAN AFTER ENTITLEMENT, A MINOR AMENDMENT APPLICATION SUBMITTAL IS OFTEN REQUIRED BEFORE THE CERTIFICATE OF OCCUPANCY WILL BE GRANTED. WHEN READY TO CALL OF INSPECTION AND SUBMIT AFFIDAVITS FIRST CONTACT THE CITY PLANNER OF RECORD (385-5905) AND AS NECESSARY OUR DRE OFFICE (385-5982).

LONG-TERM MAINTENANCE NOTE

ON-GOING MAINTENANCE DURING CONSTRUCTION:

THE CONTRACTOR SHALL BE RESPONSIBLE FOR PROVIDING ON-GOING MAINTENANCE OF ALL COMPLETED LANDSCAPE AND IRRIGATION WORK AS DEFINED UNDER CONTRACT WITH OWNER.

BEGIN MAINTENANCE IMMEDIATELY AFTER PLANTING AND CONTINUE UNTIL LANDSCAPE WORK IS COMPLETED, ACCEPTED BY OWNER, AND IF REQUESTED A FORMAL MAINTENANCE PERIOD IS INITIATED. MAINTAIN LAWNS BY WATERING, FERTILIZING, WEEDING, MOWING, TRIMMING AND OTHER OPERATIONS SUCH AS ROLLING, REGARDING, REPLANTING AS REQUIRED THROUGH CONSTRUCTION PERIOD. REMULCH WITH NEW MULCH IN AREAS WHERE MULCH HAS BEEN DISTURBED BY CONSTRUCTION OPERATIONS SUFFICIENTLY TO NULLIFY ITS PURPOSE. CONTRACTOR SHALL REPAIR SEEDED AREAS DAMAGED BY TRAFFIC AND/OR VANDALISM DURING THE CONSTRUCTION PERIOD.

IF THE IRRIGATION SYSTEM IS NOT AVAILABLE FOR PROPER WATERING AT THE TIME OF INSTALLATION, PROVIDE AND MAINTAIN TEMPORARY PIPING, HOSES, AND LAWN WATERING EQUIPMENT AS REQUIRED TO CONVEY WATER FROM SOURCES AND TO KEEP THE LAWN AREAS UNIFORMLY MOIST AS REQUIRED FOR PROPER GROWTH. FAILURE OF THE IRRIGATION SYSTEM SHALL NOT RELIEVE THE INSTALLER OF THE RESPONSIBILITY TO PROVIDE THE REQUIRED WATER. COORDINATE WITH OWNER.

ONE-YEAR WARRANTY

AS AGREED WITH OWNER CONTRACTOR SHALL PROVIDE ONE-YEAR WARRANTY ON ALL PLANT MATERIAL, GRASSES AND IRRIGATION SYSTEM. REPLACEMENT OF DEAD, DISEASED OR SUBSTANTIALLY DAMAGED PLANT MATERIALS SHALL BE OF THE SAME OR SIMILAR TYPE AS SET FORTH IN THE LANDSCAPE PLAN. REPLACEMENT SHALL BE MADE IN A TIME PERIOD NOT EXCEEDING 15 DAYS. PLANT MATERIAL NEEDING REPLACEMENT DURING WINTER MONTHS SHALL BE REPLACED AT THE START OF THE NEXT GROWING SEASON.

THE OWNER OF THIS PROPERTY AND ANY FUTURE OWNERS SHALL BE RESPONSIBLE FOR THE PROPER LANDSCAPE AND IRRIGATION SYSTEM MAINTENANCE OF THIS SITE AND ANY RIGHT-OF-WAY AREAS BETWEEN THE CURB AND PROPERTY BOUNDARIES OF THIS SITE. MAINTENANCE OF THIS INCLUDES, BUT IS NOT LIMITED TO, RIGHT OF WAY STREET TREES, IRRIGATION INSPECTIONS AND ADJUSTMENTS, IRRIGATION SYSTEM SHUT DOWN AND START UP, IRRIGATION LEAK REPAIR, LANDSCAPE WEEDING, MOWING, SEEDING, FERTILIZING, WOOD MULCH AND ROCK ADDITIONS, PRUNING AND PLANT MATERIAL REPLACEMENTS. ALL MAINTENANCE SHALL BE DONE IN ACCORDANCE WITH THE ALCC SPECIFICATIONS HANDBOOK REV EDITION 2007. OWNER SHOULD CONTACT LANDSCAPE CONTRACTOR OR LANDSCAPE ARCHITECT REGARDING ANY QUESTIONS RELATING TO THE LANDSCAPE OR IRRIGATION SYSTEM.

SLOPE STABILIZATION

LANDSCAPE CONTRACTOR TO PROVIDE EROSION CONTROL BLANKETS OR EQUAL ON SEEDED SLOPES 3:1 AND STEEPER. BLANKETS TO BE SECURED TO SLOPE PER MANUFACTURE RECOMMENDATIONS FIELD VERIFY SLOPES.

EROSION CONTROL BLANKET SHALL CONSIST OF 100% AGRICULTURAL STRAW BLANKET WITH PHOTODEGRADABLE NETTING ON BOTH SIDES.

FERTILIZER NOTES

FERTILIZER AS FOLLOWS: (USE THE DRIP LINE TO CALCULATE THE SQUARE FEET TO CALC. AREA) REFER TO SOILS REPORT FOR ADDITIONAL INFORMATION

TREES: 86 LBS PHOSPHORUS PER ACRE, 66 LBS POTASSIUM PER ACRE AND 45 LBS NITROGEN PER ACRE. ADJUST FERTILIZER RECOMMENDATIONS FOR AREA OCCUPIED BY ROOT SYSTEM, WHICH IS OFTEN TWO TO THREE TIMES, THE DIAMETER OF THE DRIPLINE. DO NOT APPLY FERTILIZER UNTIL TREES HAVE BEEN PLANTED FOR ONE FULL YEAR. APPLY HALF OF FERTILIZER IN SPRING, HALF IN FALL. SURFACE APPLY FERTILIZER TO AREA SUGGESTED ABOVE AND WATER PROPERLY. USE ABOVE RATES FOR BROADLEAF TREES. USE HALF OF ABOVE RATES FOR CONIFERS, EVERGREENS, OR FRUIT TREES.

SHRUBS: 1 LBS PHOSPHORUS PER 1,000 SF, 2 LBS NITROGEN PER 1,000 SF, 1 LBS POTASSIUM PER 1,000 SF. SPREAD RECOMMENDED FERTILIZER EVENLY OVER THE ROOT ZONE, STARTING SIX INCHES AWAY FROM THE PLANT BASE AND EXTENDING A FOOT BEYOND THE ENDS OF THE BRANCHES. RAKE INTO THE TOP INCH OF SOIL WITHOUT DISTURBING ROOTS. APPLY HALF THE RECOMMENDED FERTILIZER IN EARLY SPRING, HALF IN EARLY SUMMER.

KENTUCKY BLUEGRASS TURF: 5 LBS PHOSPHORUS PER 1,000 SF, 1 LBS NITROGEN PER 1,000 SF, 4 LBS POTASSIUM PER 1,000 SF, AND .2 COPPER PER 1,000 SF. APPLY ABOUT 1 LB OF RECOMMENDED NITROGEN IN LATE SUMMER. APPLY HALF OF REMAINING NITROGEN REQUIRED IN MID-FALL, HALF IN MID SPRING. FOR HIGH MAINTENANCE TURF, APPLY ABOUT 1 LB OF THE RECOMMENDED NITROGEN IN EARLY SUMMER. TO OBTAIN 1 LB OF ACTUAL NITROGEN, APPLY 3 TO 4 LB OF 34-0-0, 5 LB OF 20-0-0, 10 LB OF 10-0-0, OR SIMILAR FERTILIZERS.

SEEDING NOTES

SEED MIX 'A': SEED TO BE "LOW MAINTENANCE", KENTUCKY BLUEGRASS MIX, BY VITALITY, OR APPROVED EQUAL. SEED TO BE APPLIED AT 5LBS/1,000 SF USING DRILL SEED PROCESS OR HYDRO-SEED PROCESS. HAND BROADCAST IN AREAS NOT ACCESSIBLE WITH EQUIPMENT. SOIL SHALL BE AMENDED BREW-GRO BIOCOMP CLASS 1 (OR CITY APPROVED EQUAL) AT 4 C.Y./1000 SF TILLED INTO TOP 4-6" OF SOIL PRIOR TO SEEDING. CONTACT ARKANSAS VALLEY SEED FOR CURRENT MIX SPEC.

SEED MIX 'B': NATIVE SEED TO BE EL PASO COUNTY ALL PURPOSE LOW GROW MIX (OR APPROVED EQUAL). REFER TO CHART. SEED TO BE APPLIED USING DRILL SEED PROCESS OR HYDRO-SEED PROCESS. HAND BROADCAST IN AREAS NOT ACCESSIBLE WITH EQUIPMENT. SOIL SHALL BE AMENDED BREW-GRO BIOCOMP CLASS 1 (OR CITY APPROVED EQUAL) AT 3 C.Y./1000 SF TILLED INTO TOP 4-6" OF SOIL PRIOR TO SEEDING. CONTACT PAWNEE BUTTES FOR CURRENT SEED MIX. SEEDING RATES ARE NOTED IN CHART.

SEED MIX 'C': NATIVE SEED TO BE EL PASO COUNTY ALL PURPOSE FOR UPLAND MIX (OR APPROVED EQUAL). REFER TO CHART. SEED TO BE APPLIED USING DRILL SEED PROCESS OR HYDRO-SEED PROCESS. HAND BROADCAST IN AREAS NOT ACCESSIBLE WITH EQUIPMENT. SOIL SHALL BE AMENDED BREW-GRO BIOCOMP CLASS 1 (OR CITY APPROVED EQUAL) AT 3 C.Y./1000 SF TILLED INTO TOP 4-6" OF SOIL PRIOR TO SEEDING. CONTACT PAWNEE BUTTES FOR CURRENT SEED MIX. SEEDING RATES ARE NOTED IN CHART.

DEPENDING ON WEATHER, SEED SHALL BE INSTALLED WITHIN THE FOLLOWING TIME FRAMES: SEPTEMBER 1 UNTIL CONSISTENT GROUND FREEZE FOR SPRING ESTABLISHMENT (DORMANT SEEDING); SPRING THAW UNTIL JUNE 1 FOR SPRING AND SUMMER ESTABLISHMENT (ACTIVE SEEDING).

FOR HYDRO-SEEDING ALL SEEDED AREAS SHALL RECEIVE NOT LESS THAN 1 TON PER ACRE (2000 LBS) OF VIRGIN WOOD CELLULOSE HYDRO-MULCH AND 100 LBS PER ACRE OF ORGANIC TACKIFIER.

SEEDED LANDSCAPE AREAS SHALL HAVE NO BARE AREAS LARGER THAN SIX (6) SQUARE INCHES 15 DAYS AFTER GERMINATION.

DRILL SEEDING: SEEDING EQUIPMENT USED FOR APPLYING SEED MIXTURES SHALL BE DESIGNED, MODIFIED OR EQUIPPED TO REGULATE THE APPLICATION RATE AND PLANTING DEPTH OF THE SEED MIXTURE. SEED SHALL BE UNIFORMLY DISTRIBUTED IN THE DRILL HOPPER DURING THE DRILLING OPERATION. A RANGELAND DRILL CAPABLE OF MIXING DIFFERENT SIZES AND WEIGHTS OF SEEDS SHALL BE USED. THE DRILL SHALL BE EQUIPPED WITH DOUBLE DISK FURROW OPENERS, DEPTH BANDS, PRESS WHEELS OR DRAG CHAINS.

THE SEED SHALL BE DRILLED APPROXIMATELY ½" INCH BELOW THE SOIL SURFACE. HALF OF THE TOTAL RATE OF SEED APPLICATION SHALL BE DRILLED IN 1 DIRECTION, WITH THE REMAINDER OF THE SEED RATE DRILLED AT 90 DEGREES FROM THE FIRST DIRECTION.DO NOT DRILL OR SOW SEED DURING HIGH WINDS OR WHEN THE GROUND IS FROZEN OR OTHERWISE UNABLE TO BE WORKED.

ALL SEEDED AREAS LESS THAN 3:1 SHALL RECEIVE NO LESS THAN 2 TONS PER ACRE (400 LBS) OF CERTIFIED WEED FREE STRAW MULCH. STRAW MULCH SHALL BE APPLIED IN A UNIFORM MANNER BY MULCH SPREADER OR BY HAND. STRAW MULCH SHALL BE CRIMPED OR ANCHORED INTO THE SEEDBED IMMEDIATELY FOLLOWING SPREADING BY USING A MULCH TILLER (CRIMPER). MULCH TILLERS SHALL HAVE ROUND, NOTCHED-BLADES SPACED 8-INCHES APART (MIN.) AND SHALL HAVE SUFFICIENT WEIGHT TO FORCE THE VEGETATIVE MULCH A MINIMUM DEPTH OF 3-INCHES INTO THE SOIL. ALL MULCH TILLING SHALL BE DONE PERPENDICULAR TO THE FLOW-LINE OF THE SLOPE (ALONG CONTOURS). HAND CRIMPING SHALL BE PERFORMED ON AREAS WHERE MECHANICAL METHODS CANNOT BE USED.

MULCH SHALL BE APPLIED TO SEEDED AREAS (INCLUDING DAMP GROUND) WITHIN 24 HOURS FOLLOWING THE COMPLETION OF SEEDING OPERATIONS FOR THE AREA. MULCHING SHALL NOT BE PERFORMED DURING ADVERSE WEATHER CONDITIONS OR WHEN WIND PREVENTS UNIFORM DISTRIBUTION. APPLICATION SHALL BE IN A MANNER TO NOT SERIOUSLY DISTURB THE SEEDBED SURFACE.

PLANTING AREA SOIL PREP NOTES

FOR ALL PLANTING AREAS SOIL PREPARATION FOR UNDISTURBED OR COMPACTED AREAS:

A. RIP EXISTING SOIL TO A DEPTH OF NINE (9) INCHES MINIMUM IN ONE DIRECTION USING AN AGRICULTURAL RIPPER WITH TINES SPACED NO FURTHER THAN EIGHTEEN (18) INCHES APART OR TILL TO 6" DEPTH. AREAS ADJACENT TO WALKS, STRUCTURES, CURBS, ETC., WHERE THE USE OF LARGE MECHANICAL EQUIPMENT IS DIFFICULT SHALL BE WORKED WITH SMALLER EQUIPMENT OR BY HAND.

B. REMOVE ALL RUBBLE, STONES AND EXTRANEOUS MATERIAL OVER TWO (2) INCHES IN DIAMETER FROM THE SITE.

C. FOR TREE LOCATIONS REMOVE AND REPLACE EXISTING SOIL TO 36" DEPTH. IF CLAY OR SAND REPLACE WITH GRADE B TOPSOIL.

D NATIVE SEED PLANTING AREA SOIL SHALL BE AMENDED BREW-GRO BIOCOMP CLASS 1 (OR CITY APPROVED EQUAL) AT 3 C.Y./1000 SF TILLED INTO TOP 4-6" OF SOIL PRIOR TO FINAL GRADE AND PLANTING.SHRUB BED AREAS SOIL SHALL BE AMENDED BREW-GRO BIOCOMP CLASS 1 (OR CITY APPROVED EQUAL) AT 3 C.Y./1000 SF TILLED INTO TOP 4-6" OF SOIL PRIOR TO FINAL GRADE AND PLANTING.SOD AREAS SOIL SHALL BE AMENDED BREW-GRO BIOCOMP CLASS 1 (OR CITY APPROVED EQUAL) AT 4 C.Y./1000 SF TILLED INTO TOP 4-6" OF SOIL PRIOR TO FINAL GRADE AND PLANTING.

FIRE SIGNAGE NOTE

ANY VEGETATION THAT MAY GROW TO OR IMMEDIATELY OBSTRUCT ANY FIRE LANE SIGNAGE WILL BE PLANTED IN SUCH A WAY TO PREVENT ANY FUTURE OBSTRUCTION OF SUCH SIGNAGE .

GRADING AND DRAINAGE NOTE

EXISTING GRADING AND DRAINAGE SHOULD BE MAINTAINED AND IS BY OTHERS. ALL GRADES SHOULD SLOPE MINIMUM AWAY FROM ALL BUILDING FOUNDATION. PRIOR TO, OR DURING CONSTRUCTION IF DRAINAGE PROBLEMS ARE IDENTIFIED CONTACT LANDSCAPE ARCHITECT AND CEASE WORK UNTIL A SOLUTION IS AGREED TO BY ALL PARTIES. HGD, INC. PREPARED THIS LANDSCAPE PLAN BASED ON EXISTING FIELD CONDITIONS AND AND IS NOT RESPONSIBLE FOR ANY DAMAGE TO BUILDING AND/OR SITE DUE TO IMPROPER GRADING AND/OR DRAINAGE.

ACCEPTANCE NOTE

CONTRACTOR IS RESPONSIBLE FOR CONTACTING LANDSCAPE ARCHITECT FOR ALL REQUIRED CITY AFFIDAVIT INSPECTIONS. PROVIDE AT LEAST 48 HOURS NOTICE TO SCHEDULE INSPECTIONS. INSPECTIONS INCLUDE, BUT ARE NOT LIMITED TO THE FOLLOWING:

- LAYOUT AND BOULDER PLACEMENT
- PLANT TYPE, MATERIAL SIZE AND QUALITY VERIFICATION, AND PLACEMENT VERIFICATION.
- IRRIGATION MAIN LINE INSPECTION (AS APPLICABLE).
- DRIP SYSTEM COMPONENTS AND EMITTER PLACEMENT PRIOR TO MULCH INSTALLATION.
- LANDSCAPE AND IRRIGATION 95% COMPLETION PUNCH LIST INSPECTION.
- LANDSCAPE AND IRRIGATION FINAL INSPECTION AND ACCEPTANCE.

REFER TO CITY AFFIDAVIT FOR ADDITIONAL INFORMATION. SUBMIT RECEIPT FOR SOIL AMENDMENTS TO LANDSCAPE ARCHITECT AND AS-BUILT FOR IRRIGATION SYSTEM TO OWNER.

WHEN ALL THE WORK IS COMPLETED, THE OWNER'S AUTHORIZED REPRESENTATIVE SHALL UPON INSPECTION OF THE WORK TO DETERMINE ACCEPTABILITY. HE WILL PREPARE A "PUNCH LIST" OF ITEMS IMPROPERLY INSTALLED, INADEQUATELY SIZED OR OTHERWISE DEFICIENT. THE "PUNCH LIST" DEFICIENCIES SHALL BE CORRECTED NOT MORE THAN 5 WORKING DAYS AFTER THE INSPECTION. WHEN THE CORRECTIVE WORK IS COMPLETED, THE OWNER WILL ISSUE A CERTIFICATE OF SUBSTANTIAL COMPLETION OF LANDSCAPE AND IRRIGATION WORK.

THE FORMAL MAINTENANCE PERIOD (IF APPLICABLE) AND WARRANTY PERIOD SHALL COMMENCE FROM THE DATE OF FINAL ACCEPTANCE BY THE OWNER'S AUTHORIZED REPRESENTATIVE OF THE CONTRACT WORK IN ACCORDANCE WITH THESE DRAWINGS.

NATIVE GRASS MANAGEMENT NOTE

ON-GOING MAINTENANCE RECOMMENDATIONS FOR NATIVE GRASS

WELL ESTABLISHED SEEDED LAWN SHALL BE A HEALTHY, WELL-ROOTED, EVEN-COLORED, AND FREE OF WEEDS, BARE AREAS, AND SURFACE IRREGULARITIES.

THE MATURE HEIGHT OF NATIVE GRASS IS EXPECTED TO BE MAINTAINED AT ABOUT 6" HIGH AND MOWED TO 3" ONCE ANNUALLY IN THE LATE WINTER OR EARLY SPRING, AND IRRIGATED ON REDUCED WATER SCHEDULE.

THE SUCCESS OF PERMANENT NATIVE GRASS SEEDING CAN RARELY BE EVALUATED ACCURATELY PRIOR TO THE END OF ITS SECOND FULL GROWING SEASON. SEEDING SUCCESS DEPENDS UPON CONTROL OF WEED COMPETITION DURING THE FIRST TWO GROWING SEASONS. IN ADDITION, THE SITE SHOULD BE MONITORED ANNUALLY FOR UNDESIRABLE PLANT SPECIES.

THE SITE SHOULD BE MONITORED FOR UNDESIRABLE PLANT SPECIES. IF WEED CONTROL NEEDS TO BE PERFORMED DURING THE FIRST YEAR OF PLANT GROWTH, UTILIZE ONE OF TWO METHODS. REGARDLESS OF WHICH METHOD OF WEED CONTROL IS USED, COMPLETE BEFORE FLOWERING OF WEED SEED HEADS. SINCE WEED SPECIES MAY DEVELOP MATURE SEED HEADS AT DIFFERENT TIME OF THE GROWING SEASON, WEED CONTROL EFFORTS WILL BE REQUIRED.

1. HAND PULL NOXIOUS WEEDS, REMOVING AS MUCH OF THE ROOT SYSTEM AS POSSIBLE.
2. USE WEED EATERS TO SELECTIVELY CUT OFF THE SEED HEADS OF NOXIOUS WEEDS. USE SELECTIVE BROADLEAF HERBICIDE SUCH AS 2-4-D WITH A BACKPACK SPRAYER OR WICK APPLICATOR. BE CAREFUL NOT TO APPLY HERBICIDE ON MORE THAN ONE SQUARE FOOT IN ANY GIVEN AREA. CONTRACTOR TO NOTIFY OWNER'S AUTHORIZED REPRESENTATIVE OF ANY SUSPECTED SOIL PROBLEMS AT THE END OF THE FIRST GROWING SEASON. BROADBAND APPLICATIONS OF HERBICIDE CAN BE COMPLETED AFTER NATIVE GRASS SPECIES REACH MATURE HEIGHT.

SOD INSTALLATION NOTE

SOIL PREPARATION FOR SODDED AREAS

A. RIP EXISTING SOIL TO A DEPTH OF NINE (9) INCHES MINIMUM IN ONE DIRECTION USING AN AGRICULTURAL RIPPER WITH TINES SPACED NO FURTHER THAN EIGHTEEN (18) INCHES APART. AREAS ADJACENT TO WALKS, STRUCTURES, CURBS, ETC., WHERE THE USE OF LARGE MECHANICAL EQUIPMENT IS DIFFICULT SHALL BE WORKED WITH SMALLER EQUIPMENT OR BY HAND.

B. REMOVE ALL RUBBLE, STONES AND EXTRANEOUS MATERIAL OVER TWO (2) INCHES IN DIAMETER FROM THE SITE.

C. APPLY THE FOLLOWING AMENDMENTS: APPLY CLASS 1 BREW GROW MATERIAL AT A RATE OF 3 CUBIC YARDS PER 1000 SQ.FT. OF SOIL AREA. DISK (TILL) COMPOST SOIL TO A DEPTH OF 6" (INCHES).

BLUEGRASS SOD

A. PROVIDE HEALTHY, FIELD GROWN SOD, FREE FROM OTHER GRASSES, WEEDS, INSECTS AND THEIR EGGS, DISEASES, STONES AND DEBRIS, AND A MINIMUM OF ONE (1) YEAR OLD. FURNISH FROM A SOD FARM WHERE IT HAS RECEIVED REGULAR WATERING, MOWING, FERTILIZING, WEED CONTROL AND SPRAYING.

B. MOW SOD TO 11/2" TO 2" HEIGHT PRIOR TO CUTTING AND CUT TO A UNIFORM THICKNESS OF ¾" TO 1". DELIVER IN ROLLS 6' LONG AND 18" WIDE. SMALL, IRREGULAR OR BROKEN PIECES OF SOD WILL NOT BE ACCEPTED. DO NOT CUT MORE SOD THAN CAN BE PUT IN PLACE AT THE SITE THE SAME DAY.

C. DELIVER SOD TO THE SITE WITHIN 24 HOURS OF HARVESTING, AND PROTECT FROM DRYING OUT, EXPOSURE OF ROOTS TO THE SUN AND OTHER INJURY.

SOD INSTALLATION

A. AFTER SOIL PREPARATION, ROLL THE AREA TO AN EVENLY COMPACTED, FIRM SOIL BED. REMOVE HARD AND SOFT AREAS. SCARIFY SURFACE TO A DEPTH OF 3/8 INCH.
B. LAY SOD SMOOTHLY, EDGE TO EDGE, AND WITH STAGGERED JOINTS. BUTT EDGES TIGHTLY. LAY WITHIN EIGHT (8) HOURS AFTER DELIVERY.
C. WATER SOD LIGHTLY AS LAYING PROGRESSES TO PREVENT DRYING OF SOD.
D. ROLL SOD WITH A LIGHT ROLLER DIAGONALLY, LEVELING IRREGULARITIES AND SEALING JOINTS.
E. KEEP THE SOIL BED MOIST DURING LAYING OF SOD.
F. NEWLY INSTALLED SOD SHALL BE WATERED WITH ½ INCH OF WATER PER DAY FOR THE FIRST 3 DAYS, FILLING THE WATER HOLDING CAPACITY OF THE TOP 4-6 INCHES OF THE SOIL. TOTAL AMOUNT OF WATER SHOULD BE SPLIT UP OVER 2 OR 3 WATERING PERIODS EACH DAY.
G. WEEK 1: AFTER INSTALLATION, WATER NEW TURF ¾" TO 1-1/4" OF WATER PER DAY FOR THE FIRST 7 DAYS SPLIT UP OVER 4 OR 5 WATERING PERIODS EACH DAY. THE WARMER THE TEMPERATURE, THE MORE WATER YOU NEED TO APPLY.
H. WEEK 2: AFTER THE FIRST 7 DAYS, WATER AT THE RATE OF ½" PER DAY FOR 7 DAYS; SPLIT UP OVER 2-3 WATERING PERIODS EACH DAY.
I. WEEK 3: IF WATERING RESTRICTIONS ALLOW, WATER ¼" PER DAY EVERY OTHER DAY FOR 7 DAYS. AFTER THE FIRST TWO OR THREE WEEKS, REVERT TO WATERING 1-2 TIMES PER WEEK AS LOCAL WATERING RESTRICTIONS ALLOW.
J. KENTUCKY BLUEGRASS TURF: 3.1 LBS NITROGEN PER 1,000 SF: APPLY ABOUT 1 LB OF RECOMMENDED NITROGEN IN LATE SUMMER. APPLY HALF OF REMAINING NITROGEN REQUIREDIN MID-FALL, HALF IN MID SPRING. FOR HIGH MAINTENANCE TURF, APPLY ABOUT 1 LB OF THE RECOMMENDED NITROGEN IN EARLY SUMMER. TO OBTAIN 1 LB OF ACTUAL NITROGEN, APPLY 3 TO 4 LB OF 34-0-0, 5 LB OF 20-0-0, 10 LB OF 10-0-0, OR SIMILAR FERTILIZERS.

ON-GOING MAINTENANCE RECOMMENDATIONS FOR SOD BLUEGRASS LAWN

WELL ESTABLISHED LAWN SHALL BE A HEALTHY, WELL-ROOTED, EVEN-COLORED, FREE OF WEEDS, OPEN JOINTS, BARE AREAS, AND SURFACE IRREGULARITIES.

MOW SODDED LAWN AS SOON AS THERE IS ENOUGH TOP GROWTH TO CUT WITH MOWER SET AT 3" HEIGHT. DO NOT CUT MORE THAN 1/3 LENGTH OF THE GRASS BLADE AT ANY ONE MOWING. DO NOT MOW LESS THAN 3" OFF WHEN GRASS IS WET. REMOVE ALL HEAVY GRASS CLIPPING IMMEDIATELY AFTER MOWING.

SEED MIX 'C' - ALL PURPOSE

Chapter 5
Native Vegetation Requirements and Guidelines

Table 5-1. El Paso County Conservation District All-Purpose Mix for Upland, Transition and Permanent Control Measure Areas

USE THIS MIX

Common Name	Scientific Name	Growth Season / Form	% of Mix	Pounds PLS: • Irrigated broadcast • Irrigated hydroseeded (80 seeds/sq ft)	• Non-irrigated broadcast • Non-irrigated hydroseeded • Irrigated drilled (40 seeds/sq ft)	• Non-irrigated drilled (20 seeds/sq ft)
Bluestem, big	*Andropogon gerardii*	Warm, sod	20	4.4	2.2	1.1
Grama, blue	*Bouteloua gracilis*	Warm, bunch	10	0.5	0.25	0.13
Green needlegrass[2]	*Nassella viridula*	Cool, bunch	10	2	1	0.5
Wheatgrass, western[2]	*Pascopyrum smithii*	Cool, sod	20	6.4	3.2	1.6
Grama, sideoats	*Bouteloua curtipendula*	Warm, bunch	10	2	1	0.5
Switchgrass[2]	*Panicum virgatum*	Warm, bunch/sod	10	0.8	0.4	0.2
Prairie sandreed	*Calimovilfa longifolia*	Warm, sod	10	1.2	0.6	0.3
Yellow indiangrass[2]	*Sorghastrum nutans*	Warm, sod	10	2	1	0.5
			Seed rate (lbs PLS/acre)	19.3	9.7	4.8

[1]For portions of facilities located near or on the bottom or where wet soil conditions occur. Planting of potted nursery stock wetland plants 2-foot on-center is recommended for sites with wetland hydrology.

[2]Species that will do well in the bottom of pond areas.

SEED MIX 'B' - LOW GROW

Chapter 5
Native Vegetation Requirements and Guidelines

Table 5-2. El Paso County All-Purpose Low Grow Mix for Upland and Transition Areas

USE THIS MIX

Common Name	Scientific Name	Growth Season / Form	% of Mix	Pounds PLS: • Irrigated broadcast • Irrigated hydroseeded (80 seeds/sq ft)	• Non-irrigated broadcast • Non-irrigated hydroseeded • Irrigated drilled (40 seeds/sq ft)	• Non-irrigated drilled (20 seeds/sq ft)
Buffalograss	*Buchloe dactyloides*	Warm, sod	25	9.6	4.8	2.4
Grama, blue	*Bouteloua gracilis*	Warm, bunch	20	10.8	5.4	2.7
Grama, sideoats	*Bouteloua curtipendula*	Warm, bunch	29	5.6	2.8	1.4
Green needlegrass	*Nassella viridula*	Cool, bunch	5	3.2	1.6	0.8
Wheatgrass, western	*Pascopyrum smithii*	Cool, sod	20	12	6	3
Dropseed, sand	*Sporobolus cryptandrus*	Warm, bunch	1	0.8	0.4	0.2
			Seed rate (lbs PLS/acre)	42	21	10.3

City of Colorado Springs
Stormwater Enterprise
5-12
Stormwater Construction Manual
December 2020

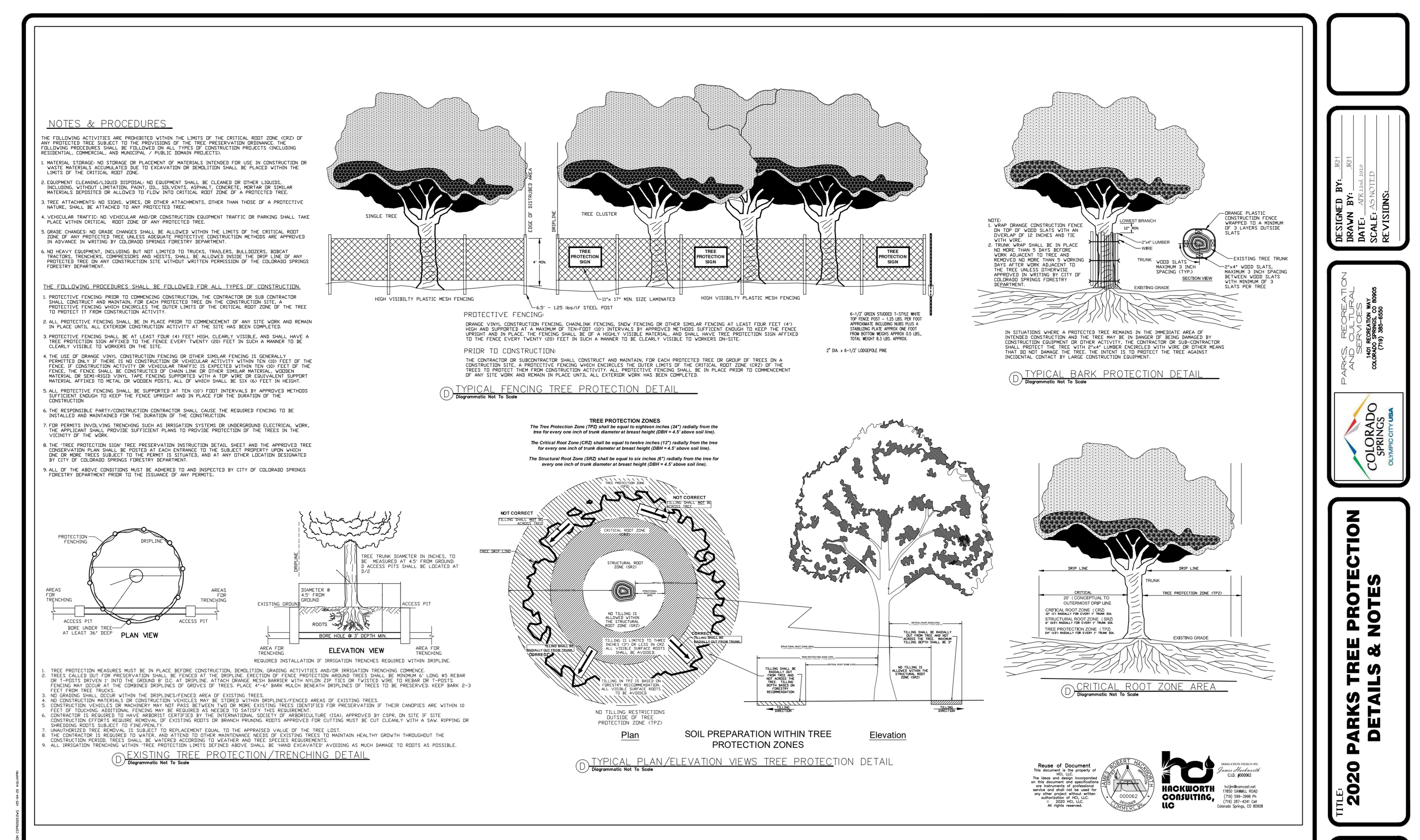

TREE PROTECTION DETAIL

STANDARD CITY OF COLORADO SPRINGS LANDSCAPE NOTES

"A Final Landscape and Irrigation Plan, with applicable supporting material, shall be submitted at time of Building Permit application and shall be approved before any Building Permit approval, any landscape or irrigation construction, and issuance of a Certificate of Occupancy."
• "All proposed landscaping shall be watered by an automatic irrigation system which will provide drip irrigation to all shrub beds and trees within native seed areas and spray irrigation to all high-water use turf and native seed areas."
• "The Owner or Developer is required to provide inspection affidavits executed by the Colorado Licensed Landscape Architect or Certified Irrigation Designer of record for the project, which certifies that the project was installed and in compliance with the approved Final Landscape and Irrigation Plan on file in City Planning. This should require limited construction observation visits to accurately complete the affidavits. When ready to call for inspection and submit affidavits, first contact the city planner of record for the project (719-385-5905) and as necessary our DRE office (719-385-5982)."
• "Copies of receipts/delivery tickets for soil amendments installed on the project are required to be provided with the inspection affidavits."
• "If soil in the parking lot has been compacted by grading operations, the soil within the planter shall be tilled, or removed to a depth of thirty (30) inches and replaced with an acceptable growing medium for the species being installed."
• "Tilling of the existing soil to incorporate amendments and counter any compaction or soil consolidation shall be required for all landscape planting areas."
• "Accessible routes, including ramps and sidewalks, within the public right-of-way shall be per city engineering standard drawings and specifications. engineering development review division inspector will have the final authority on accepting the public improvements."

811
Know what's below.
Call before you dig.

UTILITIES NOTE

VERIFY LOCATION AND DEPTH OF ALL UNDERGROUND UTILITIES PRIOR TO START OF WORK. CALL 811 FOR UTILITY LOCATES. TREE TRUNK PLACEMENT SHALL BE 6' MINIMUM DISTANCE FROM ANY GAS OR ELECTRIC AND 10' FROM GAS MAINS RATED AT 150PSI. FOR SANITARY SEWER AND WATER MAINLINES TREES SHALL NOT BE LOCATED WITHIN EASEMENTS AND WITHIN 15' OF ANY MAINLINE. ANY CONFLICT BETWEEN TREE LOCATIONS AND UTILITIES SHOWN ON PLANS SHALL BE RESOLVED WITH GENERAL CONTRACTOR PRIOR TO PLANTING. ALL ELECTRICAL VAULTS AND TRANSFORMERS SHALL BE KEPT CLEAR FROM PLANT MATERIAL PER COLORADO SPRINGS UTILITIES GUIDELINES "LANDSCAPING AROUND ELECTRICAL EQUIPMENT". SEE COLORADO SPRINGS UTILITIES CONSTRUCTION STANDARD DRAWINGS 18-302 FOR SPECIFIC CLEARANCE REQUIREMENTS. ALL SHRUBS TO BE LOCATED 3' CLEAR OF ALL FIRE HYDRANTS AT MATURE SIZE.

DOCUMENT NOTE

IRRESPECTIVE OF ANY OTHER TERM IN THIS DOCUMENT, LANDSCAPE ARCHITECT SHALL NOT CONTROL OR BE RESPONSIBLE FOR CONSTRUCTION MEANS, METHODS, TECHNIQUES, SCHEDULES, SEQUENCES OR PROCEDURES, OR FOR CONSTRUCTION SAFETY OR ANY OTHER RELATED PROGRAMS, OR FOR ANOTHER PARTIES' ERRORS OR OMISSIONS OR FOR ANOTHER PARTIES' FAILURE TO COMPLETE THEIR WORK OR SERVICES IN ACCORDANCE WITH LANDSCAPE ARCHITECT'S DOCUMENTS.

DEPN 23-0141

HIGHER GROUND DESIGNS, INC.
LANDSCAPE ARCHITECTURE, PLANNING & IRRIGATION DESIGN
5350 NORTH ACADEMY BLVD., STE. 207
COLORADO SPRINGS, CO 80918
Phone 719-477-1646
Fax 719-268-1122
HIGHER GROUND DESIGNS

ROYAL PINE APARTMENTS
4150-4180 ROYAL PINE DRIVE
COLORADO SPRINGS, CO

PREPARED FOR:
DREXEL, BARRELL & CO.

THESE DRAWINGS ARE THE PROPERTY OF HIGHER GROUND DESIGNS, INC. AND SHALL NOT BE USED FOR ANY OTHER PURPOSE WITHOUT WRITTEN AUTHORIZATION BY HIGHER GROUND DESIGNS, INC. THESE DRAWINGS ARE NOT FOR CONSTRUCTION.

CITY STAMP

NOT FOR CONSTRUCTION

JOB NUMBER 1129-23

REVISIONS

6-30-23	PER FINAL PLAN
8-11-23	PER CITY COMMENTS
9-7-23	PER DRB COMMENTS
9-11-23	PER DRB COMMENTS
9-26-23	PER CITY COMMENTS
10-25-23	PER CITY COMMENTS
11-16-23	PER CITY COMMENTS
12-11-23	PER CITY COMMENTS

ORIGINAL DATE 5-30-23

DRAWN BY JM

DESCRIPTION
FINAL LANDSCAPE NOTES

NOTES:
- MARK NORTH SIDE OF TREE AT NURSERY AND ALIGN TREE TO NORTH WHEN PLANTING.
- DO NOT REMOVE OR CUT LEADER.
- PRUNE ONLY DEAD, BROKEN, CROSSING, OR WEAK BRANCHES (OR NARROW CROTCHES) IMMEDIATELY PRIOR TO PLANTING. DO NOT REMOVE TERMINAL BUDS THAT EXTEND TO TREE CROWN.
- NO STRUCTURAL PRUNING OF TREE UNTIL AFTER ESTABLISHMENT PERIOD (2 GROWING SEASONS)
- REMOVE ANY DOUBLE LEADER, UNLESS OTHERWISE DIRECTED BY OWNER'S REPRESENTATIVE.
- KEEP PLANTS MOIST AND SHADED UNTIL PLANTING. AVOID FALL PLANTING IF POSSIBLE.
- AMENDED BACK FILL SHALL BE 70% SOIL FROM PLANTING PIT AND 30% ORGANIC MATERIAL.
- WRAP TRUNK ON EXPOSED SITES OR SPECIES WITH THIN BARK. USE ELECTRICAL TAPE, NOT TWINE. WRAP OCTOBER 15 AND REMOVE BY MARCH 31.
- DO NOT FERTILIZE TREE DURING THE FIRST GROWING SEASON.
- COORDINATE WITH CITY FORESTRY FOR CURRENT INSECT & DISEASE RECOMMENDATIONS PRIOR TO PLANTING.

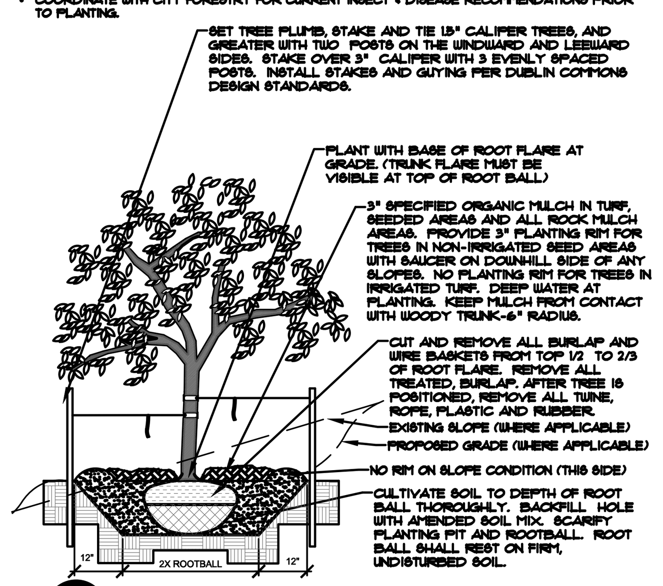

B DECIDUOUS TREE PLANTING DETAIL
NOT TO SCALE

NOTES:
- MARK NORTH SIDE OF TREE AT NURSERY AND ALIGN TREE TO NORTH WHEN PLANTING.
- DO NOT REMOVE OR CUT LEADER.
- PRUNE ONLY DEAD OR BROKEN BRANCHES IMMEDIATELY PRIOR TO PLANTING.
- REMOVE ANY DOUBLE LEADER, UNLESS OTHERWISE DIRECTED BY OWNER'S REPRESENTATIVE.
- KEEP PLANTS MOIST AND SHADED UNTIL PLANTING.
- AVOID FALL PLANTING IF POSSIBLE.
- AMENDED BACKFILL SHALL BE 70% SOIL FROM PLANTING PIT AND 30% ORGANIC MATERIAL.
- PINE AND SPRUCE TREES TO BE SPRAYED FOR IPS BARK BEETLE PRIOR TO PLANTING (SEE CONIFEROUS TREE NOTE ON PLANTING NOTES SHEET)

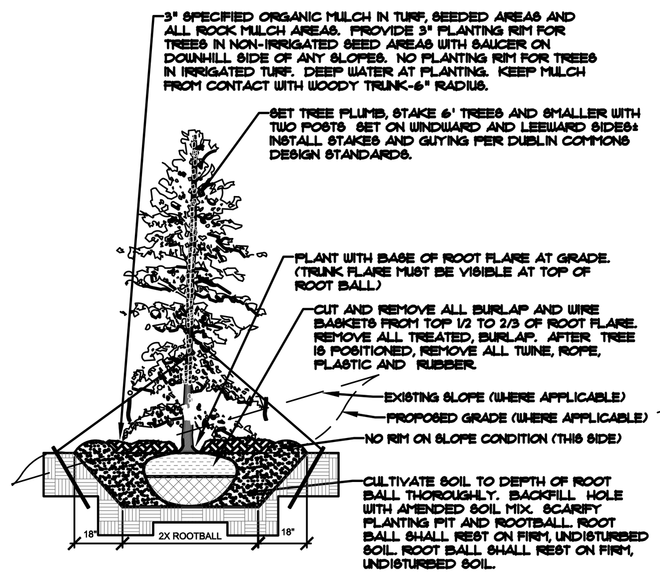

C EVERGREEN TREE PLANTING DETAIL
NOT TO SCALE

NOTES:
- PRUNE ONLY DEAD OR BROKEN BRANCHES IMMEDIATELY PRIOR TO PLANTING.
- KEEP PLANTS MOIST AND SHADED UNTIL PLANTING.
- DO NOT FERTILIZE FOR AT LEAST ONE GROWING SEASON.
- AMENDED BACK FILL SHALL BE 70% SOIL FROM PLANTING PIT AND 30% ORGANIC MATERIAL.
- FOR ROOT BIND AT BOTTOM OF BALL SPLIT ROOT BALL VERTICALLY FROM BOTTOM HALFWAY TO TOP. SPREAD THE TWO HALVES OVER A MOUND OF SOIL IN PLANTING PIT.
- FOR POT BOUND PLANTS ONLY: MAKE 4-5 VERTICAL CUTS IN ROOT BALL 1" DEEP. PLANT IMMEDIATELY.

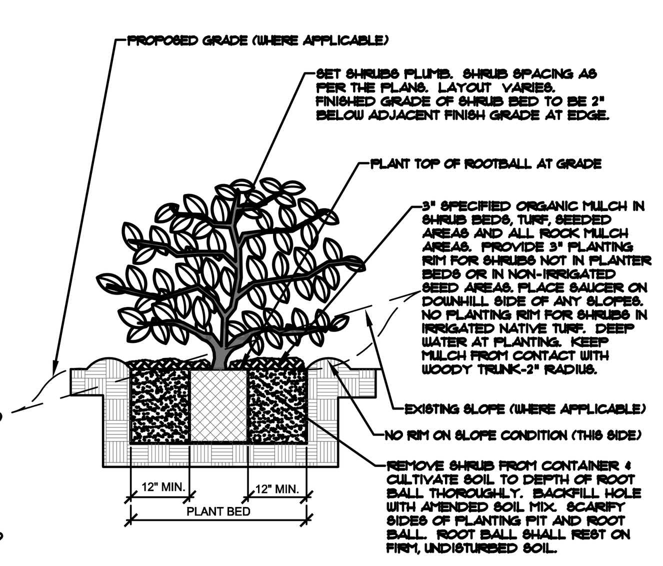

D SHRUB PLANTING DETAIL
NOT TO SCALE

NOTES:
- DO NOT REMOVE OR CUT LEADER.
- PRUNE ONLY DEAD OR BROKEN BRANCHES IMMEDIATELY PRIOR TO PLANTING.
- REMOVE ANY DOUBLE LEADER, UNLESS OTHERWISE DIRECTED BY OWNER'S REPRESENTATIVE.
- KEEP PLANTS MOIST AND SHADED UNTIL PLANTING.
- AVOID FALL PLANTING IF POSSIBLE.
- AMENDED BACKFILL SHALL BE 70% SOIL FROM PLANTING PIT AND 30% ORGANIC MATERIAL.
- FOR ROOT BIND (CONTAINER PLANTS ONLY) AT BOTTOM OF BALL SPLIT ROOT BALL VERTICALLY FROM BOTTOM HALFWAY TO TOP. SPREAD THE TWO HALVES OVER A MOUND OF SOIL IN PLANTING PIT.
- FOR POT BOUND PLANTS ONLY: MAKE 4-5 VERTICAL CUTS IN ROOT BALL 1" DEEP. PLANT IMMEDIATELY. (CONTAINER PLANTS ONLY)

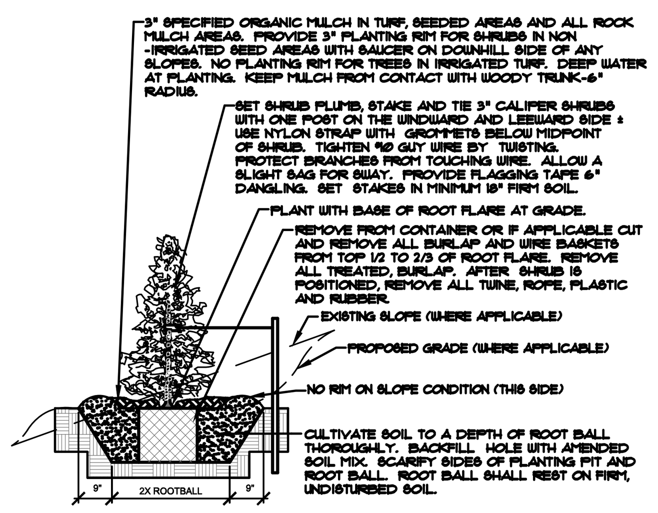

E UPRIGHT EVERGREEN SHRUB PLANTING DETAIL
NOT TO SCALE

NOTES:
- PLANT GROUND COVER AND PERENNIALS LEVEL AT GRADE.
- SOIL TO BE WELL CULTIVATED TO A MINIMUM DEPTH OF 6".
- KEEP PLANTS MOIST AND SHADED UNTIL PLANTED.
- AMENDED BACKFILL SHALL BE 30% COMPOST AND 70% NATIVE SOIL.
- PRUNE ALL DEAD OR BROKEN PARTS PRIOR TO PLANTING.

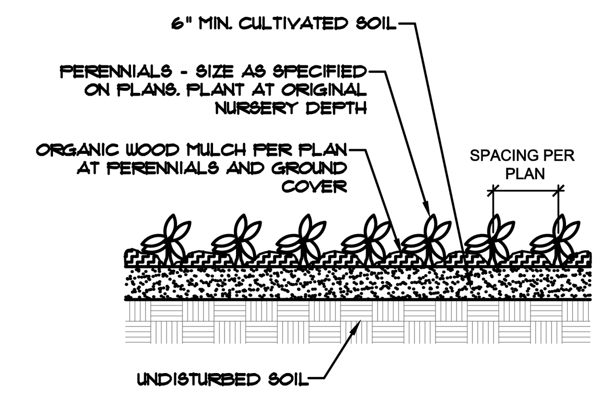

F PERENNIAL PLANTING DETAIL
NOT TO SCALE

NOTES:
- CONTRACTOR TO INSTALL WOOD MULCH RINGS AROUND LANDSCAING AS SHOWN BELOW FOR ALL TREES, SHRUBS, PERENNIALS AND ORNAMENTAL GRASSES INSTALLED IN ROCK MULCHED AREAS. ROCK SHALL BE CLEAR FROM SHRUB IN UNIFORM CIRCLE AND WOOD MULCH APPLIED AT 2" DEPTH. SEE CONSTRUCTION DETAILS FOR INSTALLATION PROCESS.
- REFER TO LANDSCAPE PLANS FOR ALL TREE, SHRUB AND ORNAMENTAL GRASS LOCATIONS

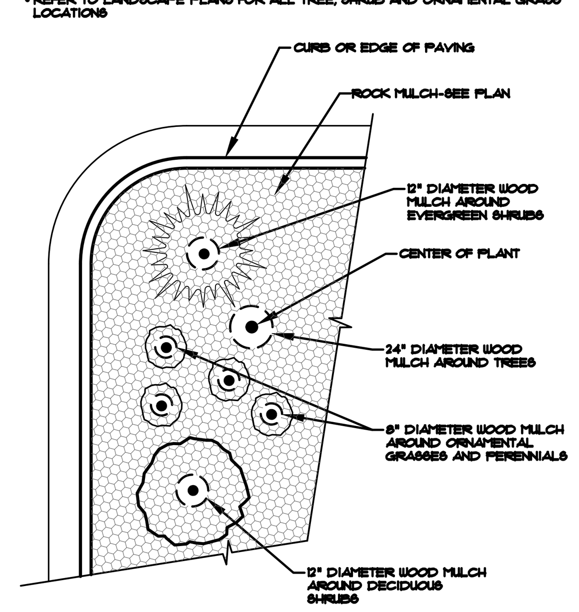

G TYPICAL PLANT MATERIAL TREATMENT
NOT TO SCALE

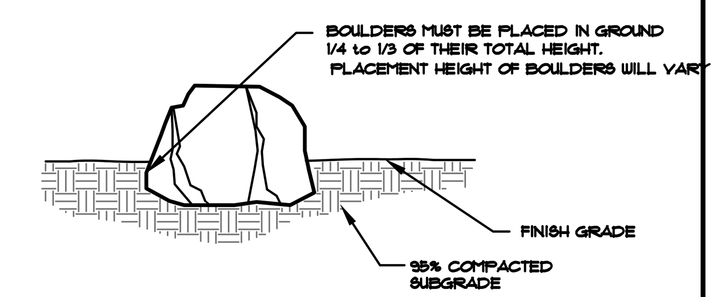

J ACCENT BOULDER SECTION
NOT TO SCALE

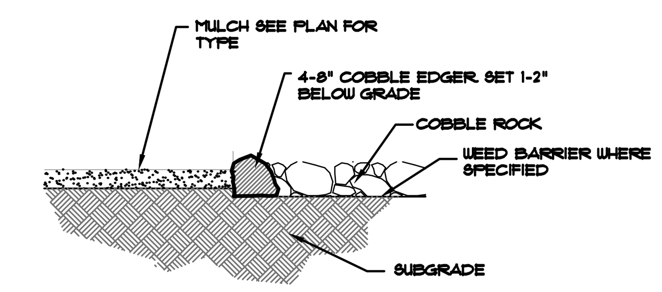

H MULCH/ROCK SECTION
NOT TO SCALE

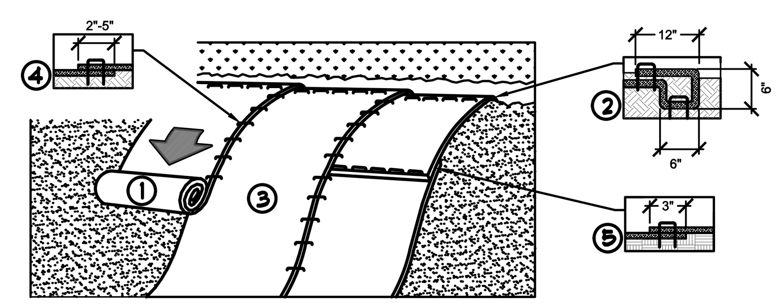

1. PREPARE SOIL BEFORE INSTALLING ROLLED EROSION CONTROL PRODUCTS (RECP's), INCLUDING ANY NECESSARY APPLICATION OF LIME, FERTILIZER, AND SEED.
   NOTE: WHEN USING CELL-O-SEED DO NOT SEED PREPARED AREA. CELL-O-SEED MUST BE INSTALLED WITH PAPER SIDE DOWN.
2. BEGIN AT THE TOP OF THE SLOPE BY ANCHORING THE RECP's IN A 6" (15 CM) DEEP X 6" (15 CM) WIDE TRENCH WITH APPROXIMATELY 12" (30cm) OF RECP's EXTENDED BEYOND THE UP-SLOPE PORTION OF THE TRENCH. ANCHOR THE RECP's WITH A ROW OF STAPLES/STAKES APPROXIMATELY 12" (30 CM) APART IN THE BOTTOM OF THE TRENCH. BACKFILL AND COMPACT THE TRENCH AFTER STAPLING. APPLY SEED TO COMPACTED SOIL AND FOLD REMAINING 12" (30 CM) PORTION OF RECP's BACK OVER SEED AND COMPACTED SOIL. SECURE RECP's OVER COMPACTED SOIL WITH A ROW OF STAPLES/STAKES SPACED APPROXIMATELY 12" (30 CM) APART ACROSS THE WIDTH OF THE RECP's.
3. ROLL THE RECP's (A) DOWN OR (B) HORIZONTALLY ACROSS THE SLOPE. RECP's WILL UNROLL WITH APPROPRIATE SIDE AGAINST THE SOIL SURFACE. ALL RECP's MUST BE SECURELY FASTENED TO SOIL SURFACE BY PLACING STAPLES/STAKES IN APPROPRIATE LOCATIONS AS SHOWN IN THE STAPLE PATTERN GUIDE. WHEN USING THE DOT SYSTEM , STAPLES/STAKES SHOULD BE PLACED THROUGH EACH OF THE COLORED DOTS CORRESPONDING TO THE APPROPRIATE STAPLE PATTERN.
4. THE EDGES OF PARALLEL RECP's MUST BE STAPLED WITH APPROXIMATELY 2" - 5" (5 CM - 12.5 CM) OVERLAP DEPENDING ON RECP's TYPE.
5. CONSECUTIVE RECP's SPLICED DOWN THE SLOPE MUST BE PLACED END OVER END (SHINGLE STYLE) WITH AN APPROXIMATE 3" (7.5 CM) OVERLAP. STAPLE THROUGH OVERLAPPED AREA, APPROXIMATELY 12" (30 CM) APART ACROSS ENTIRE RECP's WIDTH.
   NOTE: *IN LOOSE SOIL CONDITIONS, THE USE OF STAPLE OR STAKE LENGTHS GREATER THAN 6" (15 CM) MAY BE NECESSARY TO PROPERLY SECURE THE RECP's.

K EROSION CONTROL
NTS

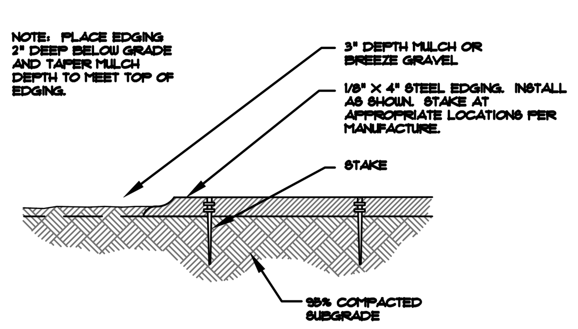

L STEEL EDGING
NOT TO SCALE

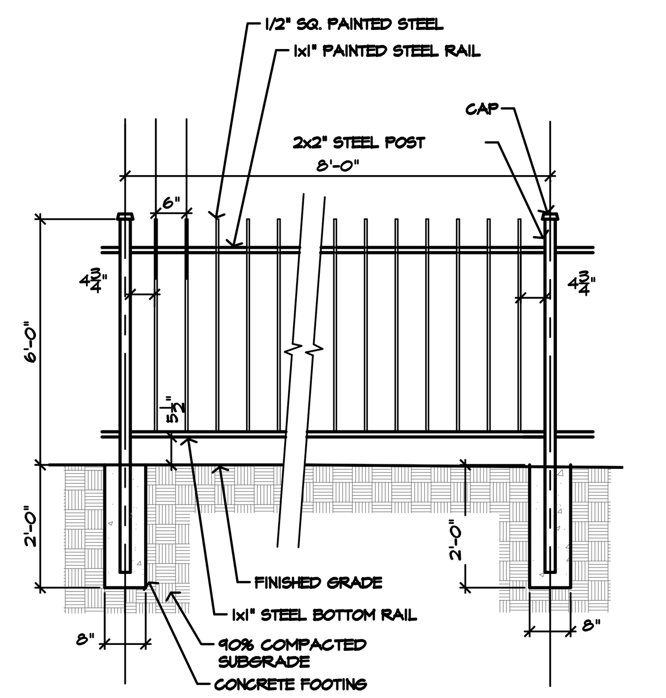

M STEEL FENCE
NTS

NOTES: • ENGINEERING OF WALL DONE BY OTHERS
• BLOCK TYPE BY OWNER

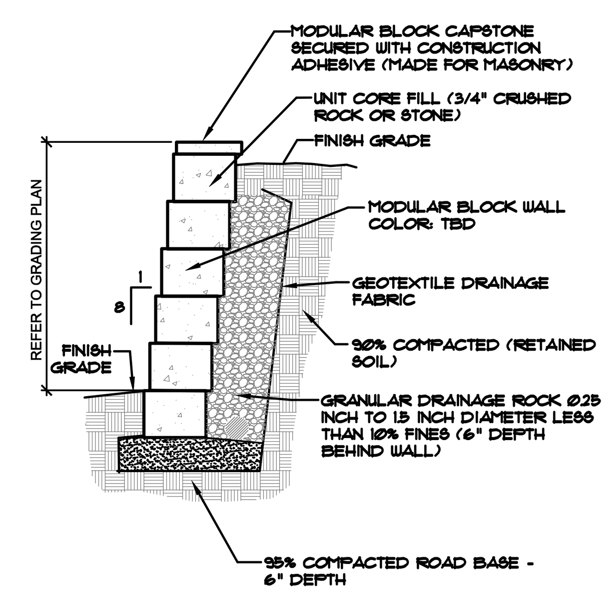

N MODULAR BLOCK RETAINING WALL
NTS

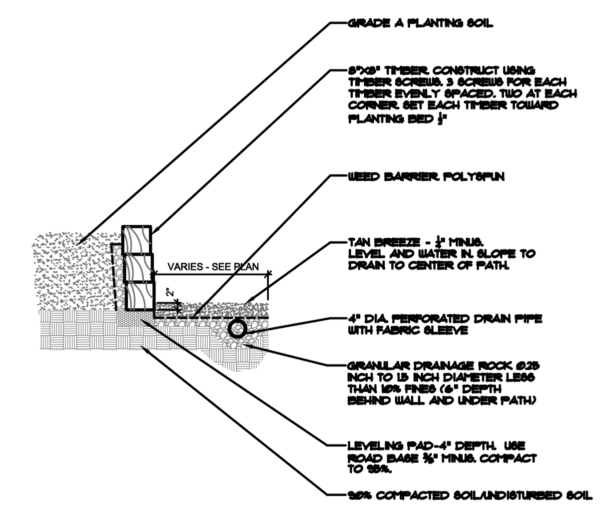

P TIMBER RAISED BED/PATHWAY DETAIL
NTS

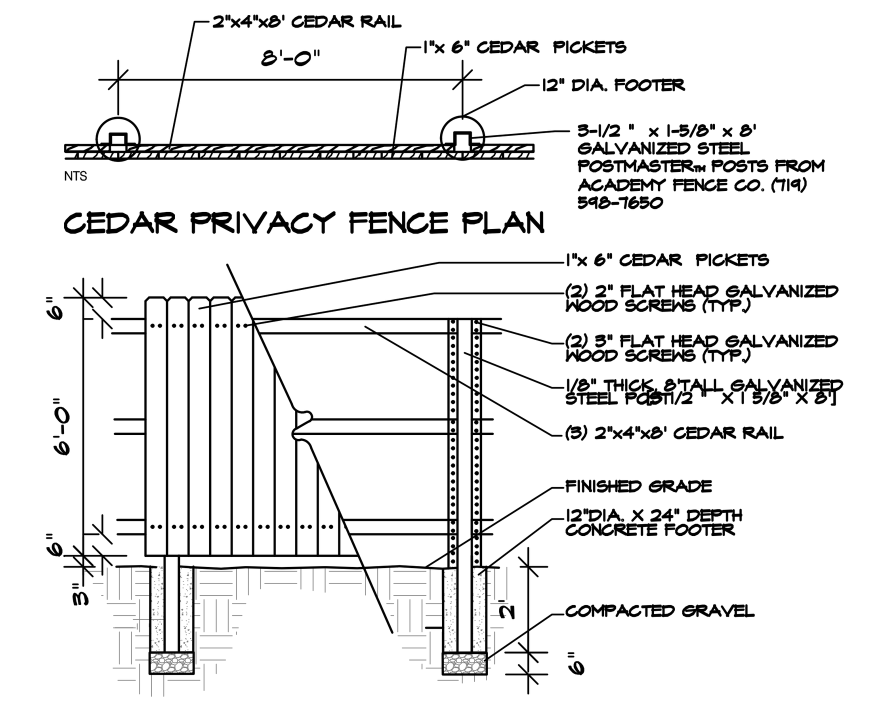

Q CEDAR PRIVACY FENCE DETAIL
NOT TO SCALE

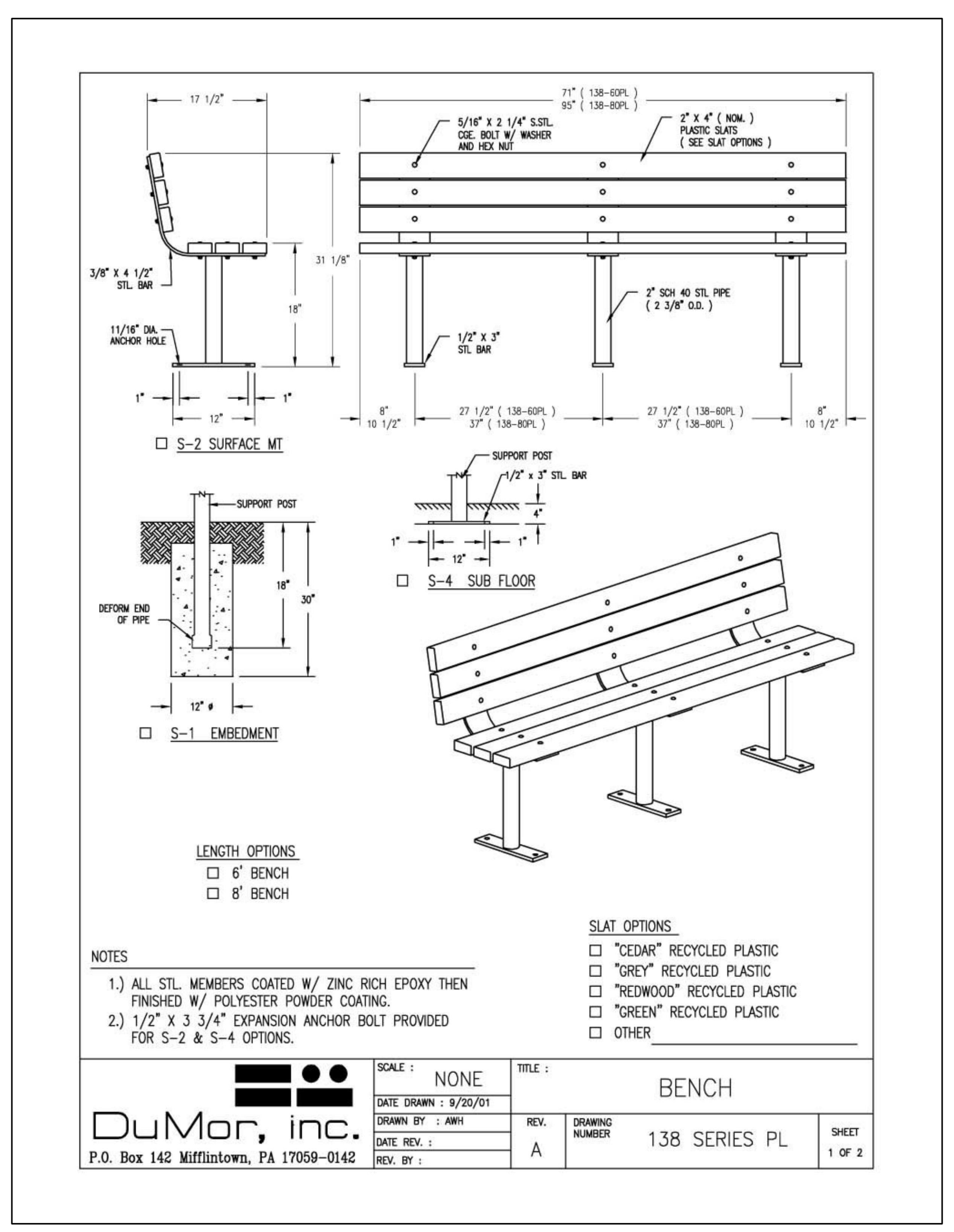

R BENCH
NOT TO SCALE

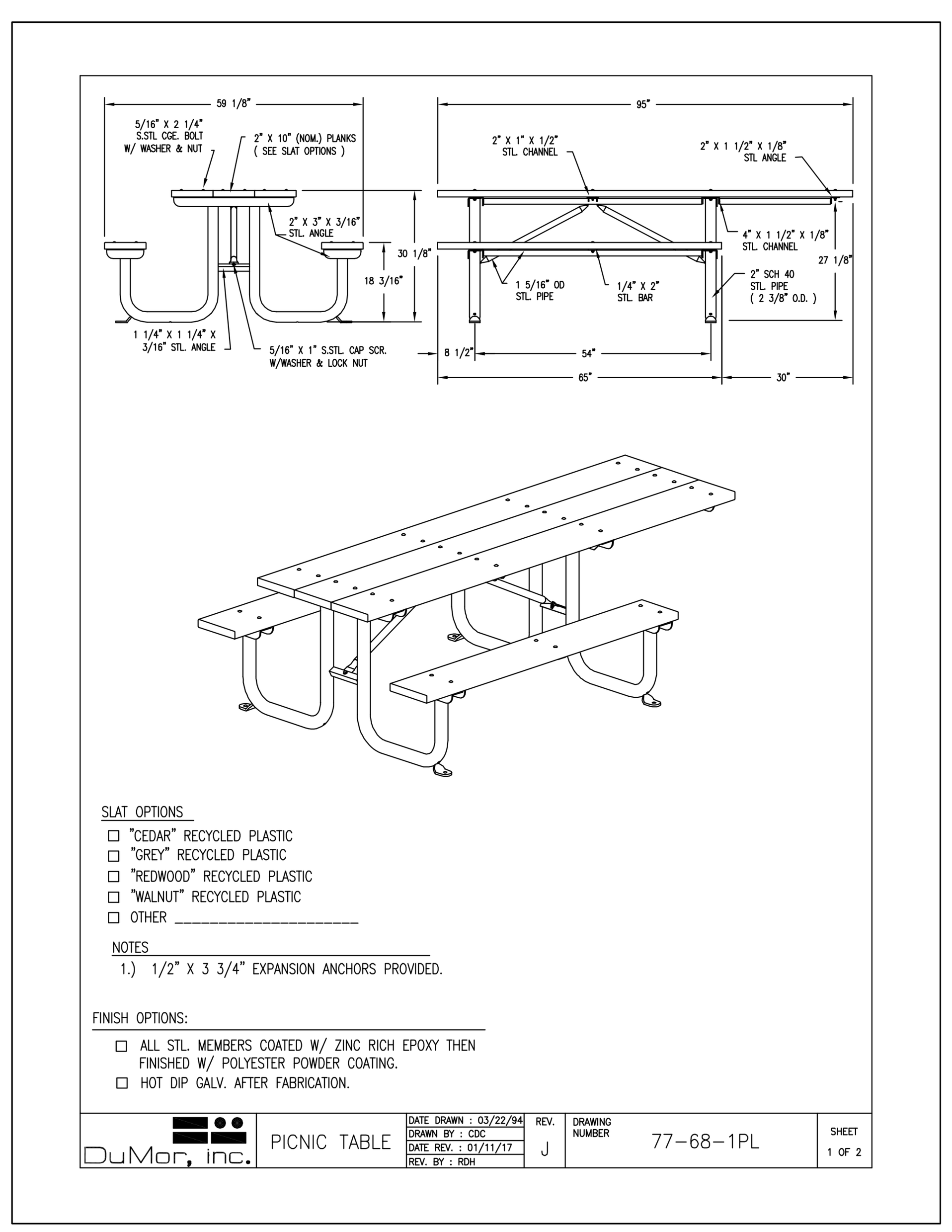

S TABLE
NOT TO SCALE

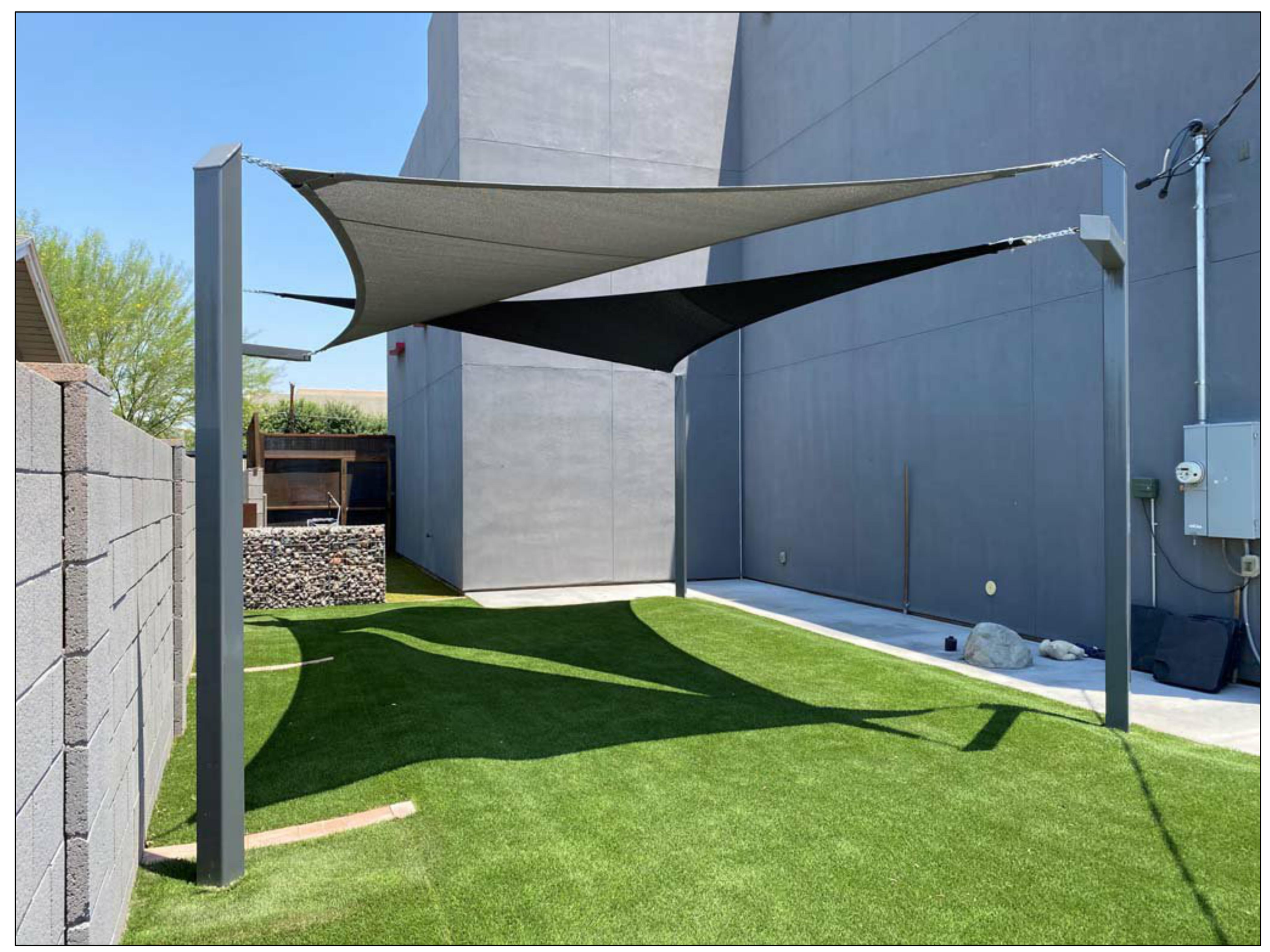

COMMERCIAL GRADE SAIL STRUCTURE: AVAILABLE THRU CREATIVE CANVAS, DENVER CO

T SHADE SAIL
NOT TO SCALE

811 Know what's below. Call before you dig.

UTILITIES NOTE
VERIFY LOCATION AND DEPTH OF ALL UNDERGROUND UTILITIES PRIOR TO START OF WORK. CALL 811 FOR UTILITY LOCATES. TREE TRUNK PLACEMENT SHALL BE 6' MINIMUM DISTANCE FROM ANY GAS OR ELECTRIC AND 10' FROM GAS MAINS RATED AT 150PSI. FOR SANITARY SEWER AND WATER MAINLINES TREES SHALL NOT BE LOCATED WITHIN EASEMENTS AND WITHIN 15' OF ANY MAINLINE. ANY CONFLICT BETWEEN TREE LOCATIONS AND UTILITIES SHOWN ON PLANS SHALL BE RESOLVED WITH GENERAL CONTRACTOR PRIOR TO PLANTING. ALL ELECTRICAL VAULTS AND TRANSFORMERS SHALL BE KEPT CLEAR FROM PLANT MATERIAL PER COLORADO SPRINGS UTILITIES GUIDELINES "LANDSCAPING AROUND ELECTRICAL EQUIPMENT". SEE COLORADO SPRINGS UTILITIES CONSTRUCTION STANDARD DRAWINGS 18-302 FOR SPECIFIC CLEARANCE REQUIREMENTS. ALL SHRUBS TO BE LOCATED 3' CLEAR OF ALL FIRE HYDRANTS AT MATURE SIZE.

DOCUMENT NOTE
IRRESPECTIVE OF ANY OTHER TERM IN THIS DOCUMENT, LANDSCAPE ARCHITECT SHALL NOT CONTROL OR BE RESPONSIBLE FOR CONSTRUCTION MEANS, METHODS, TECHNIQUES, SCHEDULES, SEQUENCES OR PROCEDURES, OR FOR CONSTRUCTION SAFETY OR ANY OTHER RELATED PROGRAMS, OR FOR ANOTHER PARTIES' ERRORS OR OMISSIONS OR FOR ANOTHER PARTIES' FAILURE TO COMPLETE THEIR WORK OR SERVICES IN ACCORDANCE WITH LANDSCAPE ARCHITECT'S DOCUMENTS.

DEPN 23-0141

HIGHER GROUND DESIGNS, INC.
LANDSCAPE ARCHITECTURE, PLANNING & IRRIGATION DESIGN
5350 NORTH ACADEMY BLVD., STE. 207
COLORADO SPRINGS, CO 80918
Phone 719-477-1646
Fax 719-268-1122

HIGHER GROUND DESIGNS

ROYAL PINE APARTMENTS
4150-4180 ROYAL PINE DRIVE
COLORADO SPRINGS, CO

PREPARED FOR:
DREXEL, BARRELL & CO.

THESE DRAWINGS ARE THE PROPERTY OF HIGHER GROUND DESIGNS, INC. AND SHALL NOT BE USED FOR ANY OTHER PURPOSE WITHOUT WRITTEN AUTHORIZATION BY HIGHER GROUND DESIGNS, INC. THESE DRAWINGS ARE NOT FOR CONSTRUCTION.

CITY STAMP

NOT FOR CONSTRUCTION

JOB NUMBER 1129-23

REVISIONS	
6-30-23	PER FINAL PLAN
8-11-23	PER CITY COMMENTS
9-7-23	PER DRB COMMENTS
9-11-23	PER DRB COMMENTS
9-26-23	PER CITY COMMENTS
10-25-23	PER CITY COMMENTS
11-16-23	PER CITY COMMENTS
12-11-23	PER CITY COMMENTS

ORIGINAL DATE 5-30-23
DRAWN BY JM
DESCRIPTION LANDSCAPE DETAILS

IRRIGATION SYSTEM DESCRIPTION

SITE IRRIGATION SYSTEM PROVIDED BY A FULLY AUTOMATED TWO-WIRE DECODER SYSTEM CONSISTING OF POP-UP SPRAY AND ROTOR HEADS IN GRASS AREAS AND DRIP IN PLANTING BEDS, GROUNDING EQUIPMENT, SPLICE BOXES, ETC. ALL ZONES TO BE OPERATED FROM ONE CONTROLLER. COORDINATE INSTALLATION OF ALL IRRIGATION COMPONENTS WITH OWNERS REPRESENTATIVE AND OTHER TRADES. QUICK COUPLERS SHALL BE PROVIDED FOR WINTERIZING INCIDENTAL WATERING AS SHOWN.

EACH CONTROL VALVE SHALL BE INSTALLED IN ONE VALVE BOX. INSTALL JUMBO BOXES AS REQUIRED TO ENSURE EQUIPMENT IS ACCESSIBLE FOR MAINTENANCE. BOXES SHALL BE PVB RAINBIRD OR APPROVED EQUAL. IF RAINBIRD PVB IS USED THE BRICK BASE IS NOT REQUIRED AT VALVE BOXES.

CONTRACTOR TO FOLLOW DESIGN AND INSTALLATION RECOMMENDATIONS FOR RAINBIRD TWO-WIRE SYSTEM INCLUDING GROUNDING. IF CONFLICT EXISTS BETWEEN THESE DRAWINGS AND RAINBIRD SPECIFICATIONS FOLLOW RAINBIRD RECOMMENDATIONS.REFER TO RAINBIRD DECODER DESIGN GUIDE FOR ADDITIONAL INFORMATION.

CONTACT RAINBIRD FOR TWO-WIRE SYSTEM SUPPORT:

Area Specification Manager
Rocky Mountain Region
Rain Bird Corporation
Local office address:
11203 Sweet Cicely Drive
Parker, CO 80134

STANDARD CITY OF COLORADO SPRINGS IRRIGATION NOTES

"The City has adopted permanent water-wise regulations as of January 1, 2020, which will affect the overall operation of the irrigation system.
From May 1 to October 15, sprinklers can be operated before 10 a.m. and after 6 p.m.
Watering is limited to three days a week (Drip irrigation is allowed at any time).
Establishment permits are required from Colorado Springs Utilities for customers who need to temporarily water more than three days a week to establish new landscapes.
Allocation plans are available for customers who need more watering schedule flexibility from Colorado Springs Utilities."

- "For all design irrigation systems, if more than three days a week are required to provide required coverage with spray/rotor stations/valves, a Water Allocation Plan is required from Colorado Springs Utilities."
- "City Affidavit Note – The design professional of record is to complete the irrigation inspection affidavit based on approved Irrigation Plan. This should require limited construction observation visits and a functional test of the irrigation system shall be performed to accurately complete the affidavit. Final CO or financial assurances release shall not be processed until an executed and approved affidavit is submitted to City Staff. When ready to call for inspection and submit affidavits, first contact the city planner of record for the project (719-385-5905) and as necessary our DRE office (719-385-5982)"

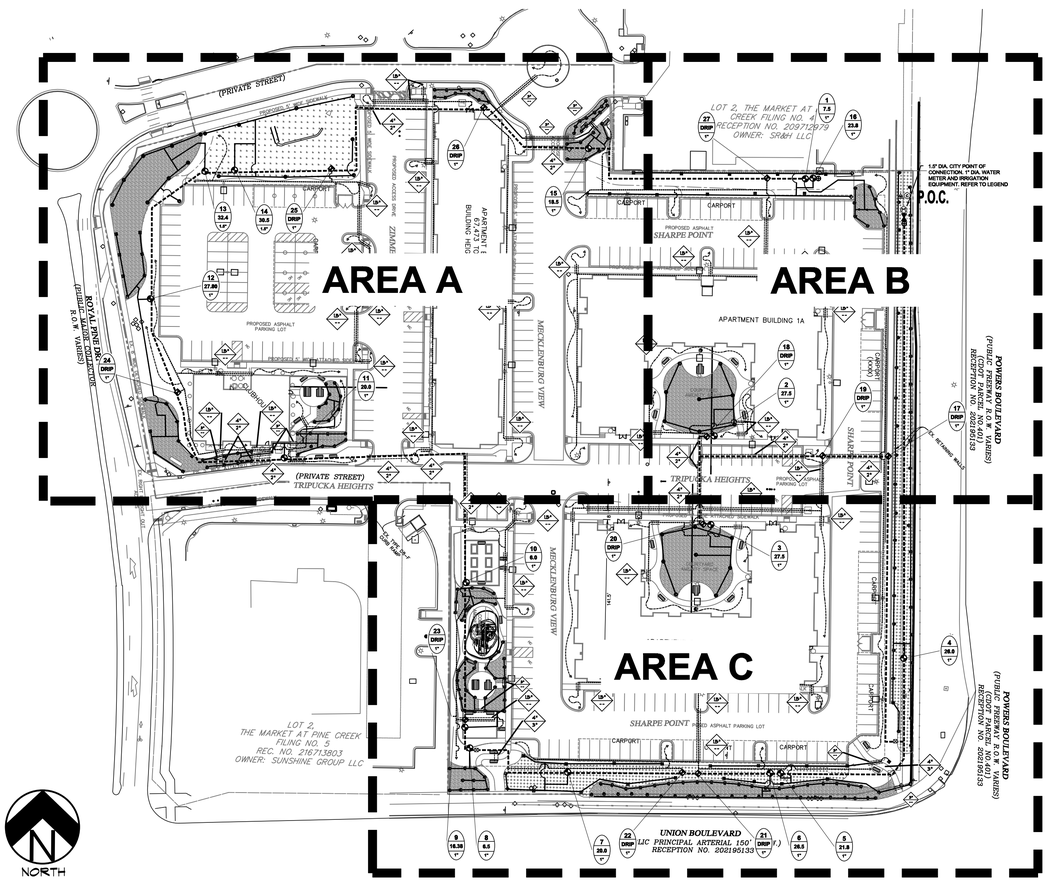

OVERALL IRRIGATION PLAN

NOT TO SCALE

GENERAL SITE NOTES

1. THE CONTRACTOR IS SPECIFICALLY CAUTIONED THAT THE LOCATION AND/OR ELEVATION OF EXISTING UTILITIES, AS SHOWN ON THESE PLANS, IS BASED ON RECORDS OF THE VARIOUS UTILITY COMPANIES AND, WHERE POSSIBLE, MEASUREMENTS TAKEN IN THE FIELD. THE INFORMATION IS NOT TO BE RELIED UPON AS BEING EXACT OR COMPLETE. THE CONTRACTOR MUST CALL THE LOCAL UTILITY LOCATION CENTER AT LEAST 48 HOURS BEFORE ANY EXCAVATION TO REQUEST EXACT FIELD LOCATIONS OF THE UTILITIES. PRIOR TO CONSTRUCTION, THE CONTRACTOR SHALL VERIFY PERTINENT LOCATIONS AND ELEVATIONS, ESPECIALLY AT CONNECTION POINTS AND AT POTENTIAL UTILITY CONFLICTS. IT SHALL BE THE RESPONSIBILITY OF THE CONTRACTOR TO RELOCATE ALL EXISTING UTILITIES THAT CONFLICT WITH THE PROPOSED IMPROVEMENTS SHOWN ON THESE PLANS.
2. THE CONTRACTOR SHALL BE RESPONSIBLE FOR OBTAINING ALL NECESSARY PERMITS FOR ALL APPLICABLE AGENCIES.
3. ALL MATERIALS, WORKMANSHIP, AND CONSTRUCTION OF PUBLIC IMPROVEMENTS SHALL MEET OR EXCEED THE STANDARDS AND SPECIFICATIONS SET FORTH IN CITY OF COLORADO SPRINGS STANDARDS AND SPECIFICATIONS AND APPLICABLE STATE AND FEDERAL REGULATIONS. WHERE THERE IS CONFLICT BETWEEN THESE PLANS AND THE SPECIFICATIONS, OR ANY APPLICABLE STANDARDS, THE HIGHER QUALITY STANDARD SHALL APPLY. ALL WORK SHALL BE INSPECTED AND APPROVED BY THE APPROPRIATE GOVERNING AGENCIES.
4. THE CONTRACTOR SHALL HAVE ONE (1) SIGNED COPY OF THE APPROVED CONSTRUCTION DOCUMENTS, ONE (1) COPY OF THE APPROPRIATE STANDARDS AND SPECIFICATIONS, AND A COPY OF ANY PERMITS AND EXTENSION AGREEMENTS NEEDED FOR THE JOB, ON-SITE AT ALL TIMES.
5. ALL REFERENCES TO ANY PUBLISHED STANDARDS SHALL REFER TO THE LATEST REVISION OF SAID STANDARD, UNLESS SPECIFICALLY STATED OTHERWISE.
6. THE CONTRACTOR SHALL BE RESPONSIBLE FOR KEEPING ROADWAYS FREE AND CLEAR OF ALL CONSTRUCTION DEBRIS TRACKED FROM THE SITE.
7. CONTRACTOR RESPONSIBLE FOR COORDINATING AND INSTALLING ALL SLEEVING REQUIRED FOR IRRIGATION CONSTRUCTION. COORDINATE WITH GENERAL CONTRACTOR.

NOZZLE NOTE

CONTRACTOR SHALL BE RESPONSIBLE FOR INSTALLING ADJUSTABLE NOZZLES IN APPROPRIATE LOCATIONS WHERE FIXED NOZZLES DO NOT PROVIDE PROPER COVERAGE. VERIFY FIELD CONDITIONS PRIOR TO INSTALLING NOZZLES. REFER TO LEGEND FOR ADDITIONAL INFORMATION.

FLUSHING & WINTERIZING NOTE

CONTRACTOR IS RESPONSIBLE FOR DETERMINING THE LOWEST POINT(S) FOR EACH DRIP SYSTEM ZONE AND INSTALL FLUSH CAP/BOX AT LOWEST POINT(S) FOR FLUSHING SYSTEM AND WINTERIZING.

DRIP SYSTEM NOTE

ALL PLANT MATERIAL SHALL RECEIVE DRIP LINE TUBING WITH EMITTERS PER DETAILS AND NOTES. FOR SYSTEM FLUSHING INSTALL FLUSH CAP AND THE END OF EACH ZONED DRIP LINE RUN AT LOWEST POINT OF LANDSCAPE AREA. INSTALL SLEEVES UNDER ALL PAVING AS REQUIRED FOR DRIP LINE. REFER TO LEGEND.

ACCEPTANCE NOTES

CONTRACTOR IS RESPONSIBLE FOR CONTACTING LANDSCAPE ARCHITECT FOR ALL REQUIRED INSPECTIONS. PROVIDE AT LEAST 48 HOURS NOTICE PRIOR TO INSPECTIONS. INSPECTIONS INCLUDE BUT ARE NOT LIMITED TO:

- -- IRRIGATION MAIN LINE OPEN TRENCH INSPECTION AND PRESSURE TEST/VERIFICATION CERT.
- -- DRIP COMPONENTS AND DRIP TUBE LAYOUT PRIOR TO MULCH INSTALLATION.
- -- IRRIGATION SUBSTANTIAL COMPLETION AND PUNCH LIST.
- -- IRRIGATION FINAL INSPECTION.

REFER TO CITY AFFIDAVIT FOR ADDITIONAL INFORMATION REGARDING INSPECTIONS.

WHEN ALL THE WORK IS COMPLETED, THE OWNER'S AUTHORIZED REPRESENTATIVE SHALL UPON INSPECTION OF THE WORK TO DETERMINE ACCEPTABILITY. HE WILL PREPARE A "PUNCH LIST" OF ITEMS IMPROPERLY INSTALLED, INADEQUATELY SIZED OR OTHERWISE DEFICIENT. THE "PUNCH LIST" DEFICIENCIES SHALL BE CORRECTED NOT MORE THAN 3 WORKING DAYS AFTER THE INSPECTION. WHEN THE CORRECTIVE WORK IS COMPLETED, THE OWNER WILL ISSUE A CERTIFICATE OF SUBSTANTIAL COMPLETION OF IRRIGATION WORK.

CONTRACTOR SHALL PROVIDE ONE-YEAR WARRANTY ON IRRIGATION SYSTEM. REPAIR/REPLACEMENT SHALL BE MADE IN A TIME PERIOD NOT EXCEEDING 30 DAYS.

THE OWNER OF THIS PROPERTY AND ANY FUTURE OWNERS SHALL BE RESPONSIBLE FOR THE PROPER IRRIGATION SYSTEM MAINTENANCE OF THIS SITE AND ANY RIGHT-OF-WAY AREAS BETWEEN THE CURB AND PROPERTY BOUNDARIES OF THIS SITE. MAINTENANCE OF THIS INCLUDES, BUT IS NOT LIMITED TO, IRRIGATION INSPECTIONS AND ADJUSTMENTS, IRRIGATION SYSTEM SHUT DOWN AND START UP, AND IRRIGATION LEAK REPAIR. ALL MAINTENANCE SHALL BE DONE IN ACCORDANCE WITH THE ALCC SPECIFICATIONS HANDBOOK REV EDITION 2007. OWNER SHOULD CONTACT LANDSCAPE CONTRACTOR OR LANDSCAPE ARCHITECT REGARDING ANY QUESTIONS RELATING TO IRRIGATION SYSTEM.

Know what's **below.**
Call before you dig.

UTILITIES NOTE

VERIFY LOCATION AND DEPTH OF ALL UNDERGROUND UTILITIES PRIOR TO START OF WORK. CALL 811 FOR UTILITY LOCATES. TREE TRUNK PLACEMENT SHALL BE 6' MINIMUM DISTANCE FROM ANY GAS OR ELECTRIC AND 10' FROM GAS MAINS RATED AT 150PSI. FOR SANITARY SEWER AND WATER MAINLINES TREES SHALL NOT BE LOCATED WITHIN EASEMENTS AND WITHIN 15' OF ANY MAINLINE. ANY CONFLICT BETWEEN TREE LOCATIONS AND UTILITIES SHOWN ON PLANS SHALL BE RESOLVED WITH GENERAL CONTRACTOR PRIOR TO PLANTING. ALL ELECTRICAL VAULTS AND TRANSFORMERS SHALL BE KEPT CLEAR FROM PLANT MATERIAL PER COLORADO SPRINGS UTILITIES GUIDELINES "LANDSCAPING AROUND ELECTRICAL EQUIPMENT". SEE COLORADO SPRINGS UTILITIES CONSTRUCTION STANDARD DRAWINGS 18-302 FOR SPECIFIC CLEARANCE REQUIREMENTS. ALL SHRUBS TO BE LOCATED 3' CLEAR OF ALL FIRE HYDRANTS AT MATURE SIZE.

DOCUMENT NOTE

IRRESPECTIVE OF ANY OTHER TERM IN THIS DOCUMENT, LANDSCAPE ARCHITECT SHALL NOT CONTROL OR BE RESPONSIBLE FOR CONSTRUCTION MEANS, METHODS, TECHNIQUES, SCHEDULES, SEQUENCES OR PROCEDURES, OR FOR CONSTRUCTION SAFETY OR ANY OTHER RELATED PROGRAMS, OR FOR ANOTHER PARTIES' ERRORS OR OMISSIONS OR FOR ANOTHER PARTIES' FAILURE TO COMPLETE THEIR WORK OR SERVICES IN ACCORDANCE WITH LANDSCAPE ARCHITECT'S DOCUMENTS.

DEPN 23-0141

HIGHER GROUND DESIGNS, INC.
LANDSCAPE ARCHITECTURE, PLANNING & IRRIGATION DESIGN

5350 NORTH ACADEMY BLVD., STE. 207
COLORADO SPRINGS, CO 80918
Phone 719-477-1646
Fax 719-288-1122

HIGHER GROUND DESIGNS

THESE DRAWINGS ARE THE PROPERTY OF HIGHER GROUND DESIGNS, INC. AND SHALL NOT BE USED FOR ANY OTHER PURPOSE WITHOUT WRITTEN AUTHORIZATION FROM HIGHER GROUND DESIGNS, INC. THESE DRAWINGS ARE NOT FOR CONSTRUCTION.

ROYAL PINE APARTMENTS
4150-4180 ROYAL PINE DRIVE
COLORADO SPRINGS, CO

PREPARED FOR:
DREXEL, BARRELL & CO.

CITY STAMP

NOT FOR CONSTRUCTION

JOB NUMBER 1129-23

REVISIONS

6-30-23	PER FINAL PLAN
8-11-23	PER CITY COMMENTS
9-7-23	PER DRB COMMENTS
9-11-23	PER DRB COMMENTS
9-26-23	PER CITY COMMENTS
10-25-23	PER CITY COMMENTS

ORIGINAL DATE 5-30-23
DRAWN BY JM
DESCRIPTION IRRIGATION PLAN OVERALL

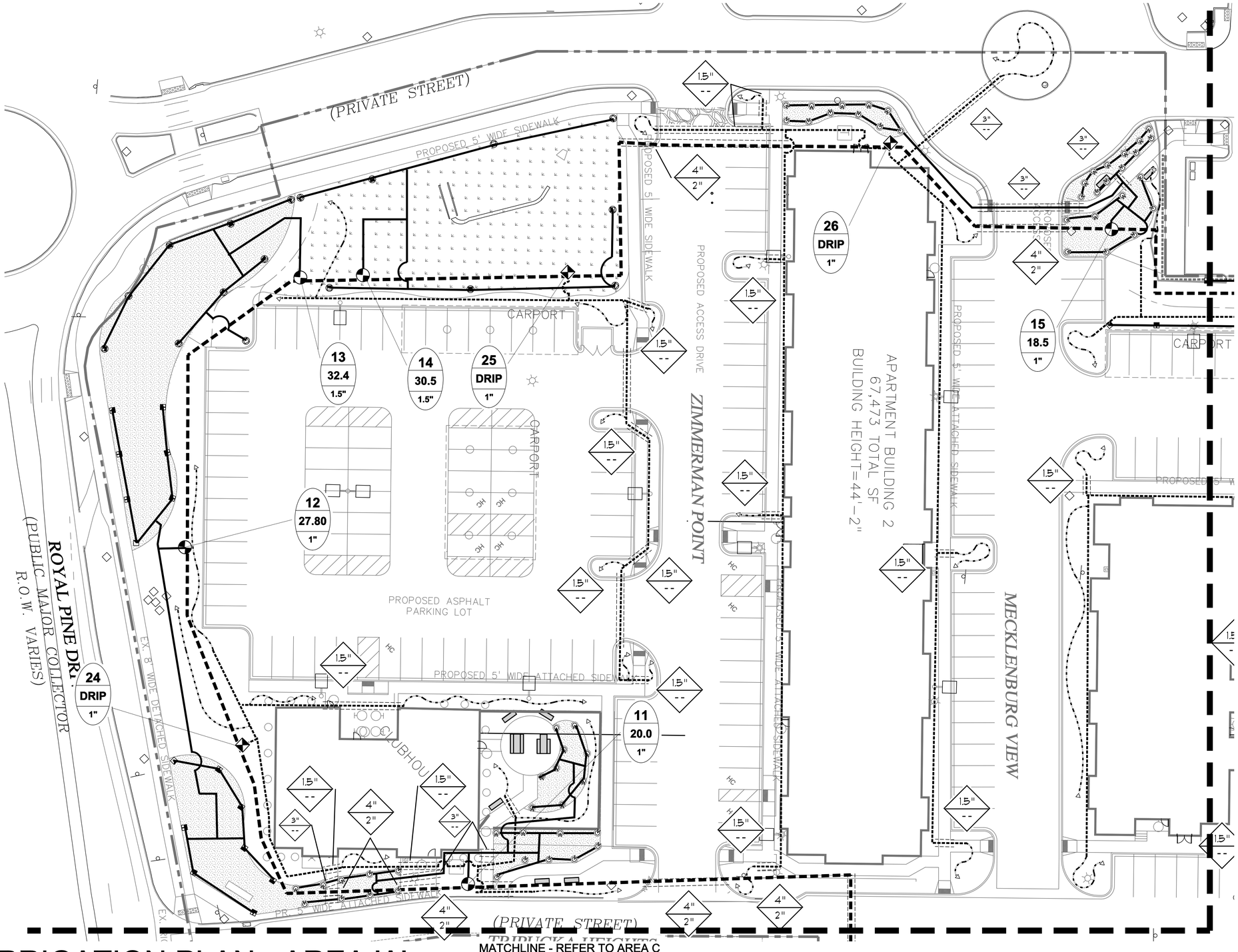

IRRIGATION PLAN - AREA 'A'

NORTH

5 15 30

10 20 SCALE 1"= 20'

Know what's **below.**
Call before you dig.

UTILITIES NOTE

VERIFY LOCATION AND DEPTH OF ALL UNDERGROUND UTILITIES PRIOR TO START OF WORK. CALL 811 FOR UTILITY LOCATES. TREE TRUNK PLACEMENT SHALL BE 6' MINIMUM DISTANCE FROM ANY GAS OR ELECTRIC AND 10' FROM GAS MAINS RATED AT 150PSI. FOR SANITARY SEWER AND WATER MAINLINES TREES SHALL NOT BE LOCATED WITHIN EASEMENTS AND WITHIN 15' OF ANY MAINLINE. ANY CONFLICT BETWEEN TREE LOCATIONS AND UTILITIES SHOWN ON PLANS SHALL BE RESOLVED WITH GENERAL CONTRACTOR PRIOR TO PLANTING. ALL ELECTRICAL VAULTS AND TRANSFORMERS SHALL BE KEPT CLEAR FROM PLANT MATERIAL PER COLORADO SPRINGS UTILITIES GUIDELINES "LANDSCAPING AROUND ELECTRICAL EQUIPMENT". SEE COLORADO SPRINGS UTILITIES CONSTRUCTION STANDARD DRAWINGS 18-302 FOR SPECIFIC CLEARANCE REQUIREMENTS. ALL SHRUBS TO BE LOCATED 3' CLEAR OF ALL FIRE HYDRANTS AT MATURE SIZE.

DOCUMENT NOTE

IRRESPECTIVE OF ANY OTHER TERM IN THIS DOCUMENT, LANDSCAPE ARCHITECT SHALL NOT CONTROL OR BE RESPONSIBLE FOR CONSTRUCTION MEANS, METHODS, TECHNIQUES, SCHEDULES, SEQUENCES OR PROCEDURES, OR FOR CONSTRUCTION SAFETY OR ANY OTHER RELATED PROGRAMS, OR FOR ANOTHER PARTIES' ERRORS OR OMISSIONS OR FOR ANOTHER PARTIES' FAILURE TO COMPLETE THEIR WORK OR SERVICES IN ACCORDANCE WITH LANDSCAPE ARCHITECT'S DOCUMENTS.

DEPN 23-0141

HIGHER GROUND DESIGNS, INC.
LANDSCAPE ARCHITECTURE, PLANNING & IRRIGATION DESIGN

5350 NORTH ACADEMY BLVD., STE. 207
COLORADO SPRINGS, CO 80918
Phone 719-477-1646
Fax 719-268-1122

HIGHER GROUND DESIGNS

ROYAL PINE APARTMENTS
4150-4180 ROYAL PINE DRIVE
COLORADO SPRINGS, CO

PREPARED FOR:
DREXEL, BARRELL & CO.

THESE DRAWINGS ARE THE PROPERTY OF HIGHER GROUND DESIGNS, INC. AND SHALL NOT BE USED FOR ANY OTHER PURPOSE WITHOUT WRITTEN AUTHORIZATION FROM HIGHER GROUND DESIGNS, INC. THESE DRAWINGS ARE NOT FOR CONSTRUCTION.

CITY STAMP

NOT FOR CONSTRUCTION

JOB NUMBER 1129-23

REVISIONS

6-30-23	PER FINAL PLAN
8-11-23	PER CITY COMMENTS
9-7-23	PER DRB COMMENTS
9-11-23	PER DRB COMMENTS
9-26-23	PER CITY COMMENTS
10-25-23	PER CITY COMMENTS

ORIGINAL DATE 5-30-23

DRAWN BY JM

DESCRIPTION
IRRIGATION PLAN
AREA A

SHEET NO.
25 OF 30

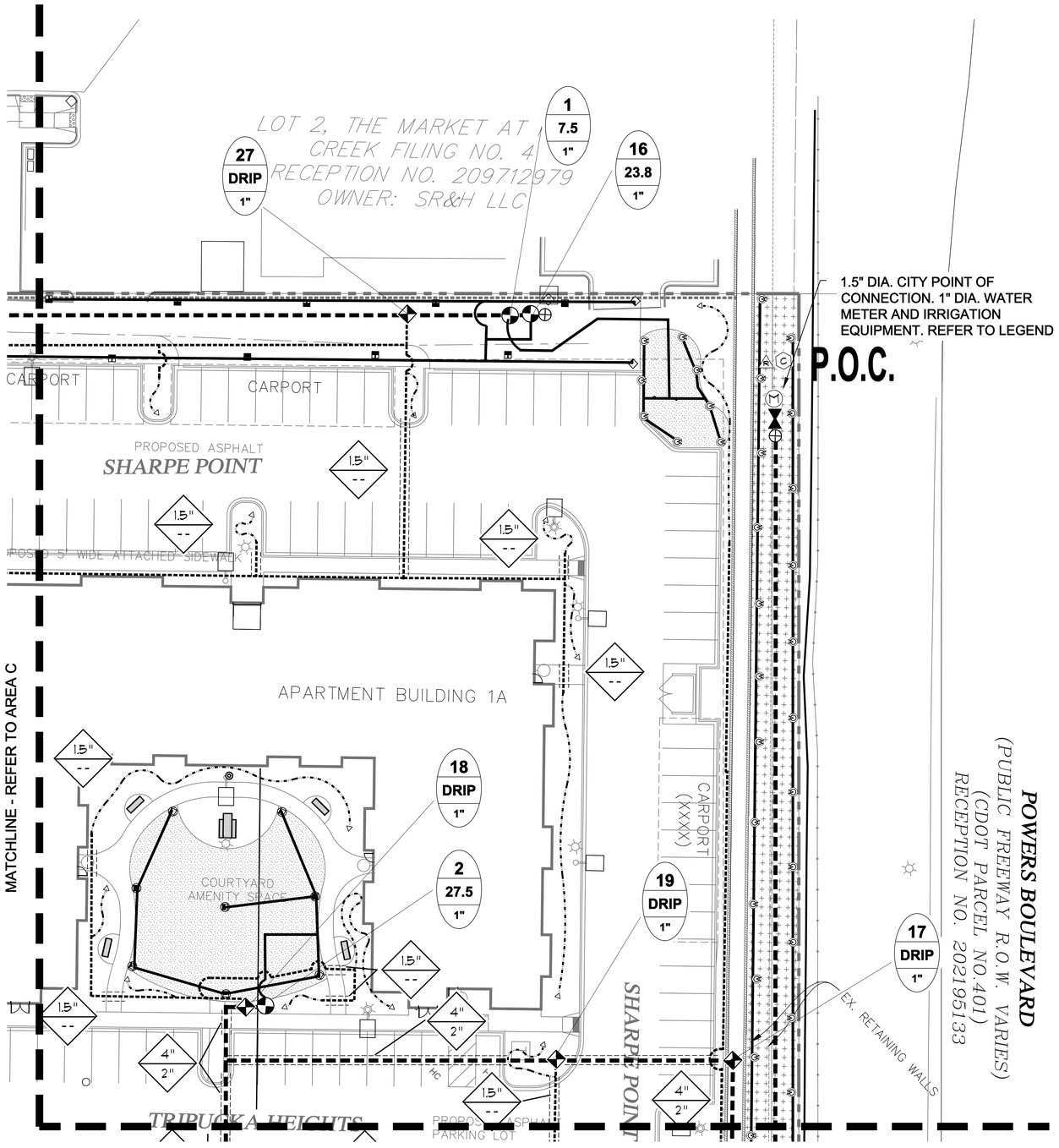

IRRIGATION PLAN - AREA 'B'

NORTH

5 10 15 20 30

SCALE 1"= 20'

Know what's below. Call before you dig.

MASTER VALVE & FLOW SENSOR NOTE

AFTER PRESSURE TEST AT POINT OF CONNECTION DETERMINE IF PSI IS SUFFICIENT TO INSTALL MASTER VALVE AND FLOW SENSOR. CONTACT LANDSCAPE ARCHITECT TO COORDINATE INSTALLING THIS EQUIPMENT.

IRRIGATION LEGEND

P.O.C.	1" POINT OF CONNECTION TO CITY WATER: CONTRACTOR TO VERIFY IN FIELD PRIOR TO IRRIGATION COMPONENT INSTALLATION. COORDINATE WITH AND GENERAL CONTRACTOR FOR LOCATION.
M	METER PIT AND 1" IRRIGATION WATER METER ASSEMBLY PER CITY CODE. TAP SIZE SHALL BE 1.5" AT CITY WATER SUPPLY. INSTALL AS REQUIRED BY CITY WATER STANDARDS AND SPECIFICATIONS.
	BACKFLOW PREVENTION DEVICE - FEBCO 1.5" 825Y RPV W/BALL VALVE - INSTALL WITH STRONG BOX BACKFLOW ENCLOSURE MODEL SBBC-75CR (DARK GREEN COLOR) OR EQUAL.
	ISOLATION VALVE: MATCO-NORCA BRASS VALVE (SAME SIZE AS MAINLINE) INSTALL IN VALVE BOX MINIMUM 10" BELOW FINAL GRADE (AT MAINLINE DEPTH)
	QUICK COUPLING VALVE RAINBIRD MODEL 5RC WITH 55K-1 KEY
C	TWO-WIRE DECODER IRRIGATION CONTROLLER MODEL RAINBIRD ESP-LXIVM. CONNECT TO ALL VALVES PER PLAN. INSTALL PER MANUFACTURE'S RECOMMENDATIONS. PEDESTAL LXMM
	RAIN SENSOR: WIRELESS WR2 (INSTALL PER MANUFACTURE RECOMMENDATIONS)
G	RAINBIRD SURGE PROTECTION. USE IVM-SD AND INSTALL MINIMUM EVERY 500 LF PER MANUFACTURE RECOMMENDATIONS
	RAINBIRD MAXI-CABLE. PAIGE MODEL P7072D FOLLOW ALL MANUFACTURE RECOMMENDATIONS FOR CONNECTIONS AND SPLICES.
	RAINBIRD PEB SERIES ELECTRIC REMOTE CONTROL VALVE. CONNECT WITH IVM-SOL. SIZE AS NOTED AT EACH ZONE. CONNECT TO DECODER PER MANUFACTURE RECOMMENDATIONS.
	RAINBIRD XCZ-100-PRB-COM. CONNECT WITH IVM-SOL PER MANUFACTURE RECOMMENDATIONS.
	RAINBIRD 5006-MPR-35-Q (BEIGE) OPERATING PRESSURE- 45 PSI, RADIUS-34', 1.92 GPM - QUARTER
	RAINBIRD 5006-MPR-35-H (BEIGE) OPERATING PRESSURE- 45 PSI, RADIUS-34', 3.81 GPM - HALF
	RAINBIRD 5006-MPR-35-F (BEIGE) OPERATING PRESSURE- 45 PSI, RADIUS-34', 8.40 GPM - FULL
	RAINBIRD 5006 MPR-25 Q GEAR DRIVEN ROTOR - MPR-25-Q (RED) OPERATING PRESSURE- 45 PSI, RADIUS-25', 1.00 GPM
	RAINBIRD 5006 MPR-25 H GEAR DRIVEN ROTOR - MPR-25-H (RED) OPERATING PRESSURE- 45 PSI, RADIUS-25', 1.98 GPM
	RAINBIRD 1806 SAM-PRS SERIES POP-UP SPRAY HEAD- R-VAN 14 SERIES OPERATING PRESSURE- 45 PSI RADIUS: 8'-14' NOZZLES: 15Q- .32 GPM, 15H- .63 GPM, 15F- 1.27GPM
	MAINLINE PIPE- CLASS 200 PVC PIPE - 3" DIAMETER - UNLESS OTHERWISE NOTED)
	LATERAL PIPE- CLASS 200 PVC PIPE (1" DIA. UNLESS OTHERWISE NOTED)
	CLASS 200 PVC PIPE FOR SLEEVING
4" / 2"	PIPE SLEEVE SIZE (SEE PLAN) WIRE SLEEVE SIZE (SEE PLAN)
* / 2 / 14 / 1"	LAST VALVE; ZONE #; GPM DISCHARGE; REMOTE CONTROL VALVE SIZE
	DRIP IRRIGATION LATERAL PIPE 100/80 PSI POLYETHYLENE PIPE: 1" DIAMETER BURY LATERAL 10" MINIMUM DEPTH
	ON-SURFACE DRIP LINE LOOP LINE: RAINBIRD XFD-09-18 USED IN SEEDED AREAS FOR SHRUBS AND TREES - ROUTE ACCORDINGLY TO PLANT MATERIAL
	DRIP LINE TUBING: CENTENNIAL 3/4" OR 1/2" DIAMETER USED IN SEEDED AREAS FOR SHRUBS AND TREES - ROUTE ACCORDINGLY TO PLANT MATERIAL
	FLUSH CAP: AGRIFIM 3/4" CAP MODEL CETC-34 OR 1" AS REQUIRED FOR SYSTEM FLUSH. INSTALL AT ENDS. (INSTALL IN 6" MIN. VALVE BOX AMETEK OR EQUAL)

IVM RAINBIRD IRRIGATION SYSTEM

SYSTEM IS RAINBIRD 2-WIRE IVM CONTROLLER WITH IVM-SOL, IVM-OUT, IVM-SEN AND IVM-SD COMPONENTS. NSTALL PER MANUFACTURE RECOMMENATIONS AND GUIDELINES. CONTACT RAINBIRD FOR ADDITIONAL SUPPORT.

AFTER PRESSURE TEST AT POINT OF CONNECTION IS SUFFICIENT TO INSTALL MASTER VALVE AND FLOW SENSOR CONTACT LANDSCAPE ARCHITECT TO COORDINATE INSTALLING THIS EQUIPMENT.

GROUNDING NOTE

Note: Because the RAINBIRD FD-401 & FD-601 Field Decoders and SD-210 Sensor Decoder have built-in surge protection, the 2-wire path surge protection requirement could be stated in the following manner: The 2-wire path shall be surge protected and grounded with one LSP-1, FD401, FD-601 or SD-210 every 500 feet or every 8 decoders, whichever is smaller.

UTILITIES NOTE

VERIFY LOCATION AND DEPTH OF ALL UNDERGROUND UTILITIES PRIOR TO START OF WORK. CALL 811 FOR UTILITY LOCATES. TREE TRUNK PLACEMENT SHALL BE 6' MINIMUM DISTANCE FROM ANY GAS OR ELECTRIC AND 10' FROM GAS MAINS RATED AT 150PSI. FOR SANITARY SEWER AND WATER MAINLINES TREES SHALL NOT BE LOCATED WITHIN EASEMENTS AND WITHIN 15' OF ANY MAINLINE. ANY CONFLICT BETWEEN TREE LOCATIONS AND UTILITIES SHOWN ON PLANS SHALL BE RESOLVED WITH GENERAL CONTRACTOR PRIOR TO PLANTING. ALL ELECTRICAL VAULTS AND TRANSFORMERS SHALL BE KEPT CLEAR FROM PLANT MATERIAL PER COLORADO SPRINGS UTILITIES GUIDELINES "LANDSCAPING AROUND ELECTRICAL EQUIPMENT". SEE COLORADO SPRINGS UTILITIES CONSTRUCTION STANDARD DRAWINGS 18-302 FOR SPECIFIC CLEARANCE REQUIREMENTS. ALL SHRUBS TO BE LOCATED 3' CLEAR OF ALL FIRE HYDRANTS AT MATURE SIZE.

DOCUMENT NOTE

IRRESPECTIVE OF ANY OTHER TERM IN THIS DOCUMENT, LANDSCAPE ARCHITECT SHALL NOT CONTROL OR BE RESPONSIBLE FOR CONSTRUCTION MEANS, METHODS, TECHNIQUES, SCHEDULES, SEQUENCES OR PROCEDURES, OR FOR CONSTRUCTION SAFETY OR ANY OTHER RELATED PROGRAMS, OR FOR ANOTHER PARTIES' ERRORS OR OMISSIONS OR FOR ANOTHER PARTIES' FAILURE TO COMPLETE THEIR WORK OR SERVICES IN ACCORDANCE WITH LANDSCAPE ARCHITECT'S DOCUMENTS.

DEPN 23-0141

CITY STAMP

NOT FOR CONSTRUCTION

HIGHER GROUND DESIGNS, INC.
LANDSCAPE ARCHITECTURE, PLANNING & IRRIGATION DESIGN
5350 NORTH ACADEMY BLVD., STE. 207
COLORADO SPRINGS, CO 80918
Phone 719-477-1646
Fax 719-288-1122

HIGHER GROUND DESIGNS

THESE DRAWINGS ARE THE PROPERTY OF HIGHER GROUND DESIGNS, INC. AND SHALL NOT BE USED FOR ANY OTHER PURPOSE WITHOUT WRITTEN AUTHORIZATION FROM HIGHER GROUND DESIGNS, INC. THESE DRAWINGS ARE NOT FOR CONSTRUCTION.

ROYAL PINE APARTMENTS
4150-4180 ROYAL PINE DRIVE
COLORADO SPRINGS, CO

PREPARED FOR:
DREXEL, BARRELL & CO.

JOB NUMBER 1129-23

REVISIONS

6-30-23	PER FINAL PLAN
8-11-23	PER CITY COMMENTS
9-7-23	PER DRB COMMENTS
9-11-23	PER DRB COMMENTS
9-26-23	PER CITY COMMENTS
10-25-23	PER CITY COMMENTS

ORIGINAL DATE 5-30-23

DRAWN BY JM

DESCRIPTION
IRRIGATION PLAN
AREA B

SHEET NO.
26 OF 30

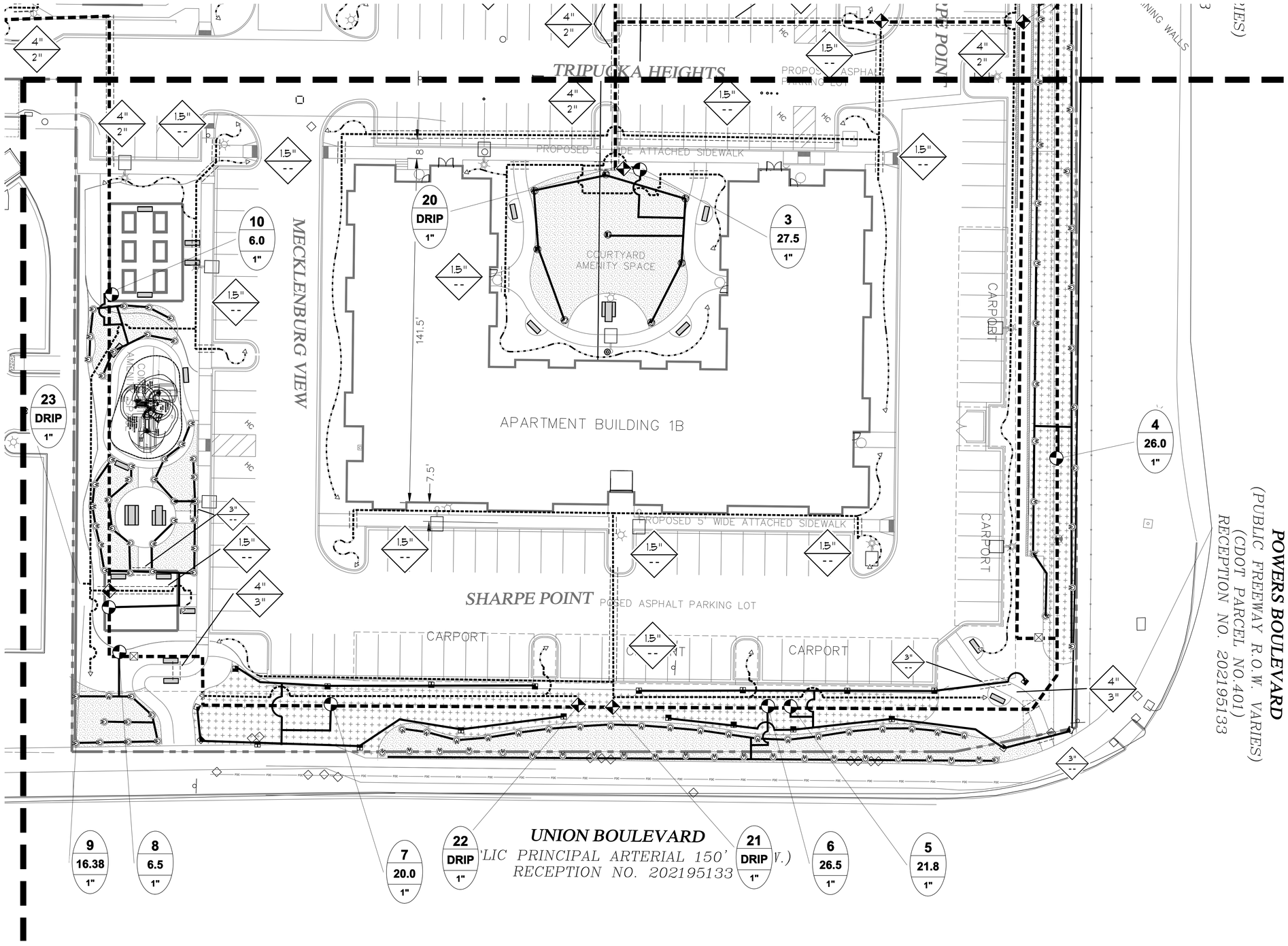

IRRIGATION PLAN - AREA 'C'

MATCHLINE - REFER TO AREA C

NORTH

5 15 30

10 20 SCALE 1"= 20'

811 Know what's below. Call before you dig.

UTILITIES NOTE

VERIFY LOCATION AND DEPTH OF ALL UNDERGROUND UTILITIES PRIOR TO START OF WORK. CALL 811 FOR UTILITY LOCATES. TREE TRUNK PLACEMENT SHALL BE 6' MINIMUM DISTANCE FROM ANY GAS OR ELECTRIC AND 10' FROM GAS MAINS RATED AT 150PSI. FOR SANITARY SEWER AND WATER MAINLINES TREES SHALL NOT BE LOCATED WITHIN EASEMENTS AND WITHIN 15' OF ANY MAINLINE. ANY CONFLICT BETWEEN TREE LOCATIONS AND UTILITIES SHOWN ON PLANS SHALL BE RESOLVED WITH GENERAL CONTRACTOR PRIOR TO PLANTING. ALL ELECTRICAL VAULTS AND TRANSFORMERS SHALL BE KEPT CLEAR FROM PLANT MATERIAL PER COLORADO SPRINGS UTILITIES GUIDELINES "LANDSCAPING AROUND ELECTRICAL EQUIPMENT". SEE COLORADO SPRINGS UTILITIES CONSTRUCTION STANDARD DRAWINGS 18-302 FOR SPECIFIC CLEARANCE REQUIREMENTS. ALL SHRUBS TO BE LOCATED 3' CLEAR OF ALL FIRE HYDRANTS AT MATURE SIZE.

DOCUMENT NOTE

IRRESPECTIVE OF ANY OTHER TERM IN THIS DOCUMENT, LANDSCAPE ARCHITECT SHALL NOT CONTROL OR BE RESPONSIBLE FOR CONSTRUCTION MEANS, METHODS, TECHNIQUES, SCHEDULES, SEQUENCES OR PROCEDURES, OR FOR CONSTRUCTION SAFETY OR ANY OTHER RELATED PROGRAMS, OR FOR ANOTHER PARTIES' ERRORS OR OMISSIONS OR FOR ANOTHER PARTIES' FAILURE TO COMPLETE THEIR WORK OR SERVICES IN ACCORDANCE WITH LANDSCAPE ARCHITECT'S DOCUMENTS.

DEPN 23-0141

CITY STAMP

NOT FOR CONSTRUCTION

HIGHER GROUND DESIGNS, INC.
LANDSCAPE ARCHITECTURE, PLANNING & IRRIGATION DESIGN
5350 NORTH ACADEMY BLVD., STE. 207
COLORADO SPRINGS, CO 80918
Phone 719-477-1646
Fax 719-288-1122

HIGHER GROUND DESIGNS

ROYAL PINE APARTMENTS
4150-4180 ROYAL PINE DRIVE
COLORADO SPRINGS, CO

PREPARED FOR:
DREXEL, BARRELL & CO.

THESE DRAWINGS ARE THE PROPERTY OF HIGHER GROUND DESIGNS, INC. AND SHALL NOT BE USED FOR ANY OTHER PURPOSE WITHOUT WRITTEN AUTHORIZATION FROM HIGHER GROUND DESIGNS, INC. THESE DRAWINGS ARE NOT FOR CONSTRUCTION.

JOB NUMBER 1129-23

REVISIONS

6-30-23	PER FINAL PLAN
8-11-23	PER CITY COMMENTS
9-7-23	PER DRB COMMENTS
9-11-23	PER DRB COMMENTS
9-26-23	PER CITY COMMENTS
10-25-23	PER CITY COMMENTS

ORIGINAL DATE 5-30-23

DRAWN BY JM

DESCRIPTION
IRRIGATION PLAN
AREA C

SHEET NO.
27 OF 30

IRRIGATION NOTES

COORDINATE ALL UNDERGROUND UTILITY LOCATIONS PRIOR TO ANY DIGGING ON SITE. ALL MATERIALS AND INSTALLATION PRACTICES SHALL BE IN COMPLIANCE WITH LOCAL CODES. CALL 811 FOR UTILITY LOCATES.

CONTRACTOR IS RESPONSIBLE FOR INSTALLING ALL IRRIGATION COMPONENTS SHOWN ON THE PLAN. ANY DEVIATIONS FROM THIS PLAN ARE TO BE APPROVED BY OWNER'S REPRESENTATIVE AND/OR LANDSCAPE ARCHITECT. DEVIATIONS FROM THE APPROVED PLAN SHALL REQUIRE LANDSCAPE ARCHITECT APPROVAL.

THE IRRIGATION SYSTEM IS TO RUN OFF METERED TAP AT THE LOCATION INDICATED. COORDINATE WITH OWNER'S REPRESENTATIVE AND OTHER TRADES TO GET WATER METER PITS AT LOCATION SHOWN. COORDINATE WITH CITY WATER TO INSURE PROPER METER INSTALLATION.

THE SYSTEM CONTROLLER SHALL BE LOCATED AS SHOWN. COORDINATE LOCATION OF CONTROLLER AND RAIN SENSOR WITH OWNER. CONNECT CONTROLLER TO POWER SUPPLY AND COORDINATED WITH OWNER. CONNECT CONTROLLER TO ZONE VALVES, RAIN SENSOR, AND GROUNDING PER MANUFACTURE'S INSTRUCTIONS.

CONTRACTOR IS RESPONSIBLE FOR ALL IRRIGATION SLEEVING. INSTALL SLEEVING TO ACCESS ALL LANDSCAPE AREAS. SLEEVING FOR LATERAL LINES TO BE 12" BELOW TOP OF GRADE AND/OR BELOW THE BOTTOM OF PAVING. MAINLINE SLEEVING TO BE 18" BELOW TOP OF GRADE AND/OR BELOW THE BOTTOM OF PAVING. ALL SLEEVING TO EXTEND 3" BEYOND EDGE OF CONCRETE OR ASPHALT. ENDS OF SLEEVING TO BE SECURELY COVERED AFTER INSTALLATION. SLEEVE LOCATIONS TO BE CLEARLY MARKED WITH PAINTED STAKES OR PVC. CONTRACTOR IS RESPONSIBLE FOR VERIFYING ALL SLEEVING LOCATIONS PRIOR TO CONSTRUCTION AND INSTALL ANY MISSING SLEEVE IF NECESSARY.

ALL SPRINKLER HEADS SHALL INSTALLED WITH TOP OF HEADS FLUSH WITH SURROUNDING FINAL GRADE. CONTRACTOR SHALL ADJUST EACH SPRINKLER HEAD TO PROVIDE OPTIMAL COVERAGE. OVERSPRAY ONTO PAVEMENT OR WALLS IS TO BE PREVENTED. CONTRACTOR TO ADJUST AND SELECT NOZZLES TO PROVIDE UNIFORM COVERAGE. PROVIDE PRESSURE COMPENSATING NOZZLES OR SCREENS IF UNIFORM PRESSURE CANNOT BE ACHIEVED BY ADJUSTING PRESSURE AT VALVES.

IRRIGATION PLAN IS DIAGRAMMATIC. ANY COMPONENTS SHOWN ON PLAN OUTSIDE OF LANDSCAPE ARE SHOWN FOR CLARITY ONLY. USE ONLY STANDARD FITTINGS. MAINLINE PIPING DEPTH TO BE 18". LATERAL LINE DEPTH TO BE 12". DRIP LINE TO BE SECURED AT FINAL SOIL GRADE.

CONTRACTOR IS TO INSTALL IRRIGATION WIRE BETWEEN CONTROLLER AND ELECTRIC VALVES. INSTALL TWO EXTRA WIRES RUNNING FROM CONTROLLER ALONG MAINLINE IN EACH DIRECTION FROM THE CONTROLLER FOR TROUBLE SHOOTING OR FUTURE ADDITIONS. WIRE SHALL BE SOLID COPPER #14 PE IRRIGATION CONTROL WIRE. CONNECTIONS SHALL BE MADE WITHIN ENCLOSURES ONLY USING 3M BRAND DBY AND DBR CONNECTORS. NO BURIED SPLICES PERMITTED.

NOTIFY OWNER'S REPRESENTATIVE OF ANY DISCREPANCIES BETWEEN PLAN DRAWINGS AND FIELD CONDITIONS PRIOR TO INSTALLATION OF ANY IRRIGATION COMPONENTS.

HIGHER GROUND DESIGNS, INC. (HGD) PREPARED THIS PLAN BASED ON EXISTING CONDITIONS AND SITE PLAN BY OTHERS. HDG DOES NOT RECOMMEND SPRAY/ROTOR OPERATION OR ROTOR/SPRAY OVER SPRAY WITHIN 5' OF ANY BUILDING. HGD ASSUMES NO LIABILITY FOR ANY WATER DAMAGE ON THIS SITE.

ALL DRIP POLYETHYLENE LATERALS AND DRIP TUBING FITTINGS SHALL BE RIBBED PLASTIC WITH OETIKER BRAND CLAMPS. THE END OF EACH DRIP LINE TO RECEIVE A DRIP FLUSH CAP PER DETAIL.

INSTALL VALVE BOXES IN PLANTER AND ROCK AREAS WHEN POSSIBLE. DO NOT SET VALVE BOXES IN TURF OR SEEDED AREAS UNLESS UNAVOIDABLE.

IRRIGATION SYSTEM MATERIALS

- PRESSURE SUPPLY LINE (FROM POINT OF CONNECTION THROUGH BACKFLOW PREVENTION UNIT) - TYPE "K" RIGID COPPER. PRESSURE SUPPLY LINES (DOWNSTREAM OF BACKFLOW PREVENTION UNITS) - CLASS 200 PVC SOLVENT WELD (1" - 2 1/2") SOLVENT WELD PIPE - MANUFACTURED FROM VIRGIN POLYVINYL CHLORIDE (PVC) COMPOUND IN ACCORDANCE WITH ASTM D2241 AND ASTM D1784; CELL CLASSIFICATION 12454-B, TYPE 1, GRADE 1. FITTINGS - STANDARD WRIGHT, SCHEDULE 40, INJECTION MOLDED PVC; COMPLYING WITH ASTM D1784 AND D2466, CELL CLASSIFICATION 12454-B
- THREADS - INJECTION MOLDED TYPE (WHERE REQUIRED).
- TEES AND ELLS - SIDE GATED. THREADED NIPPLES - ASTM D2464, SCHEDULE 80 WITH MOLDED THREADS
- ALL PVC MALE THREADED FITTINGS AND NIPPLES, EXCLUDING MARLEX FITTINGS, SHALL RECEIVE WRAPPING OF TEFLON TAPE
- JOINT CEMENT AND PRIMER - TYPE AS RECOMMENDED BY MANUFACTURER OF PIPE AND FITTINGS.
- FLEXIBLE PLASTIC PIPE - MANUFACTURED FROM VIRGIN POLYETHYLENE IN ACCORDANCE WITH ASTM D2239, WITH A HYDROSTATIC DESIGN STRESS OF 630 PSI AND DESIGNATED AS PE 2306. FITTINGS - INSERT TYPE MANUFACTURED IN ACCORDANCE WITH ASTM D2609; PVC TYPE 1 CELLCLASSIFICATION 12454-B.

IRRIGATION SYSTEM INSTALLATION

- BACKFILLING - DO NOT BEGIN BACKFILLING OPERATIONS UNTIL REQUIRED SYSTEM TESTS HAVE BEEN COMPLETED. BACKFILL SHALL NOT BE DONE IN FREEZING WEATHER EXCEPT WITH REVIEW BY CONSULTANT. TRENCHES SHALL BE FINISH GRADED PRIOR TO WALK-THROUGH OF SYSTEM BY OWNER/CONSULTANT.
- EXCAVATED MATERIAL IS GENERALLY CONSIDERED SATISFACTORY FOR BACKFILL PURPOSES. BACKFILL MATERIAL SHALL BE FREE OF RUBBISH, VEGETABLE MATTER, FROZEN MATERIALS, AND STONES LARGER THAN 1 INCH IN MAXIMUM DIMENSION. DO NOT MIX SUBSOIL WITH TOPSOIL. MATERIAL NOT SUITABLE FOR BACKFILL SHALL BE HAULED AWAY. CONTRACTOR SHALL BE RESPONSIBLE FOR PROVIDING SUITABLE BACKFILL IF EXCAVATED MATERIAL IS UNACCEPTABLE OR NOT SUFFICIENT TO MEET BACKFILL, COMPACTION, AND FINAL GRADE REQUIREMENTS.
- DO NOT LEAVE TRENCHES OPEN FOR A PERIOD OF MORE THAN 48 HOURS. OPEN EXCAVATIONS SHALL BE PROTECTED IN ACCORDANCE WITH OSHA REGULATIONS. COMPACT BACKFILL TO 90% MAXIMUM DENSITY, DETERMINED IN ACCORDANCE WITH ASTM D155-7. MECHANICAL TAMPING IS PROHIBITED WITHIN 20'-0" OF BUILDING OR FOUNDATION WALLS.

EXECUTION

- CONTRACTOR SHALL BE RESPONSIBLE FOR REMOVAL OF ANY SOIL RETENTION COVERING THAT WOULD INTERFERE WITH THE PROPER INSTALLATION OF THE IRRIGATION SYSTEM.
- CONTRACTOR WILL BE HELD RESPONSIBLE FOR COORDINATION BETWEEN LANDSCAPE AND IRRIGATION SYSTEM INSTALLATION. LANDSCAPE MATERIAL LOCATIONS SHOWN ON THE LANDSCAPE PLAN SHALL TAKE PRECEDENCE OVER THE IRRIGATION SYSTEM EQUIPMENT LOCATIONS. IF IRRIGATION EQUIPMENT IS INSTALLED IN CONFLICT WITH THE LANDSCAPE MATERIAL LOCATIONS SHOWN ON THE LANDSCAPE PLAN, THE CONTRACTOR WILL BE REQUIRED TO RELOCATE THE IRRIGATION EQUIPMENT, AS NECESSARY, AT CONTRACTOR'S EXPENSE.
- CONTRACTOR IS RESPONSIBLE TO NOTIFY CONSULTANT OF ANY FIELD CONDITIONS THAT VARY FROM THE CONDITIONS SHOWN ON THE IRRIGATION CONSTRUCTION DOCUMENTS. IF CONTRACTOR FAILS TO NOTIFY CONSULTANT OF THESE CONDITIONS, CONTRACTOR WILL BE HELD RESPONSIBLE FOR ALL COSTS ASSOCIATED WITH SYSTEM ADJUSTMENTS REQUIRED DUE TO THE CHANGE IN FIELD CONDITIONS.
- STATIC PRESSURE VERIFICATION - CONTRACTOR SHALL FIELD VERIFY THE STATIC PRESSURE AT THE PROJECT SITE, PRIOR TO COMMENCING WORK OR ORDERING IRRIGATION MATERIALS. IF CONTRACTOR FAILS TO VERIFY STATIC WATER PRESSURE PRIOR TO COMMENCING WORK OR ORDERING IRRIGATION MATERIALS, CONTRACTOR SHALL ASSUME RESPONSIBILITY FOR ALL COSTS REQUIRED TO MAKE SYSTEM OPERATIONAL AND THE COSTS REQUIRED TO REPLACE ANY DAMAGED LANDSCAPE MATERIAL. DAMAGE SHALL INCLUDE ALL REQUIRED MATERIAL COSTS, DESIGN COSTS AND PLANT REPLACEMENT COSTS.
- INSPECTION: - EXAMINE AREAS AND CONDITIONS UNDER WHICH WORK OF THIS SECTION IS TO BE PERFORMED. DO NOT PROCEED WITH WORK UNTIL UNSATISFACTORY CONDITIONS HAVE BEEN CORRECTED.

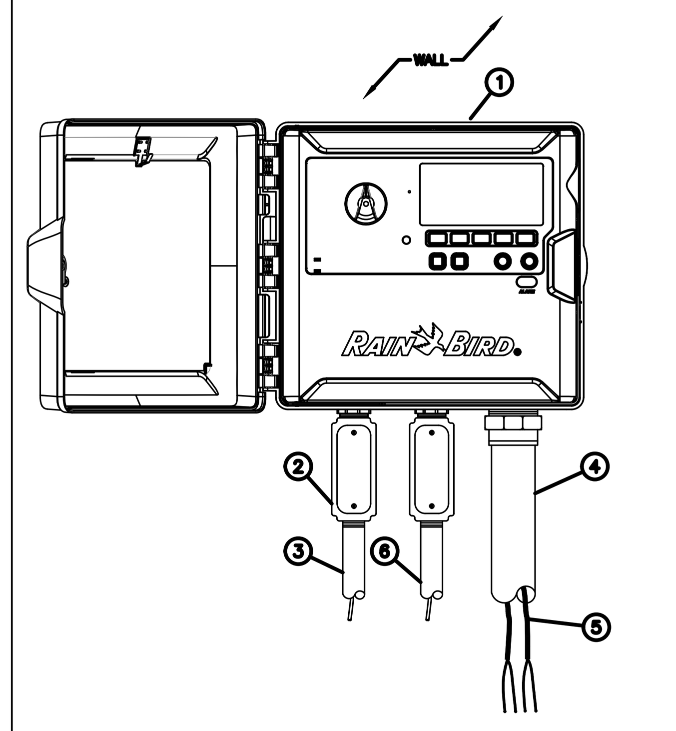

(1) TWO-WIRE CONTROLLER: RAIN BIRD ESP-LXIVM/PRO IN PLASTIC CABINET WITH WALL MOUNT. INSTALL CONTROLLER AND CABINET ON WALL PER MANUFACTURER'S RECOMMENDATIONS.

(2) JUNCTION BOX

(3) 1-INCH CONDUIT AND FITTINGS FOR POWER SUPPLY WIRE

(4) 2-INCH CONDUIT AND FITTINGS FOR TWO-WIRE CABLE

(5) MAXICABLE TWO-WIRE PATH TO FIELD DEVICES USE A DIFFERENT CABLE JACKET COLOR FOR EACH PATH.

(6) 1-INCH CONDUIT AND FITTINGS FOR GROUND WIRE. ONLY FOR OUTDOOR INSTALLATIONS.

NOTES:
1. ESP-LXIVM CONTROLLER IS AVAILABLE IN TWO MODELS. THE LXIVM WITH 60 STATIONS AND THE LMIVM-PRO WITH 240 STATIONS. REFER TO THE CHART BELOW FOR DIFFERENCES BETWEEN THE TWO MODELS.
2. USE STEEL CONDUIT FOR ABOVE GRADE AND SCH 40 PVC CONDUIT FOR BELOW GRADE CONDITIONS.
3. PROVIDE PROPER GROUNDING COMPONENTS TO ACHIEVE GROUND RESISTANCE OF 10 OHMS OR LESS. IF CONTROLLER IS MOUNTED INDOORS, USE POWER SUPPLY GROUND.

KEY SPECIFICATIONS

FEATURE ▶ / MODEL ▼	MAX PROGRAMS	STATIONS	MAX SIMULSTATIONS	MASTER VALVES	FLOW SENSORS	WEATHER SENSORS
LX-IVM	10	60	8	5	5	4
LX-IVM PRO	40	240	16	10	10	8

A ESP-LXIVM/PRO TWO-WIRE CONTROLLER IN PLASTIC CABINET 2020-04-20
N.T.S.

IRR 1129-23V.1

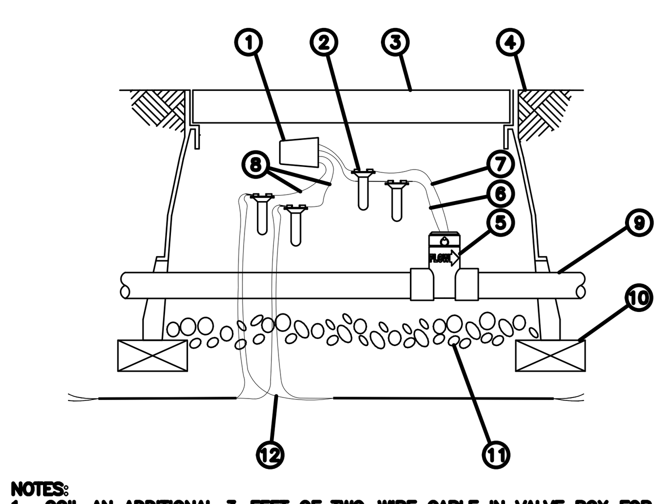

NOTES:
1. COIL AN ADDITIONAL 3-FEET OF TWO-WIRE CABLE IN VALVE BOX FOR EASY SERVICING.
2. FOR OPTIMUM PERFORMANCE, FLOW SENSORS SHOULD BE INSTALLED A MINIMUM OF 10 PIPE DIAMETERS IN LENGTH ON THE UPSTREAM (SUPPLY) SIDE AND A LEAST 5 PIPE DIAMETERS IN LENGTH ON THE DOWNSTREAM (DELIVERY) SIDE BEFORE MAKING ANY TRANSITIONS IN PIPE SIZE/DIRECTION OR AWAY FROM THE MASTER VALVE.

(1) RAIN BIRD IVM-SEN

(2) WATERPROOF CONNECTION RAIN BIRD WC20 (FOUR REQUIRED)

(3) VALVE BOX WITH COVER: RAIN BIRD VB-STD

(4) FINISH GRADE/TOP OF MULCH

(5) FLOW SENSOR

(6) CONNECT THE RED/WHITE STRIPED WIRE ON IVM-SEN TO THE FLOW SENSOR RED WIRE

(7) CONNECT THE BLACK/WHITE STRIPED WIRE ON IVM-SEN TO THE FLOW SENSOR BLACK WIRE. BE SURE TO FOLLOW ALL INSTRUCTIONS INCLUDED IN THE FLOW SENSOR.

(8) CONNECT THE RED AND BLACK WIRES ON THE IVM-SEN TO THE TWO-WIRE PATH

(9) PVC MAINLINE PIPE

(10) BRICK (1 OF 4)

(11) 3-INCH MINIMUM DEPTH OF 3/4-INCH WASHED GRAVEL

(12) TWO-WIRE CABLE BETWEEN DEVICES

B IVM-SEN AND FLOW SENSOR
N.T.S.

IRR 1129-23V.1 – 2020-11-16

FLOW CHART

HIGHER GROUND DESIGNS *IRRIGATION PSI LOSS CALC*

PROJECT NAME	ROYAL PINE APARTMENTS	CALC. BY	JM		
JOB #		DATE	9/26/2023		
METER SIZE	1	ZONE			
SERVICE LINE	1	HEAD	ROTOR		
METER ELEVATION	6,995	NOZZLE			
		PIPE SIZING	MEDIUM		
AVAILABLE PSI AT P.O.C.	80	SYSTEM CALC	HIGH GPM ZONE		

#	PIPE SIZE	TYPE OF PIPE	LATERAL LINE	GPM	DISTANCE	PSI LOSS
1	1	CLASS 200		4	40	0.12
2	1.5	CLASS 200		4.64	40	0.26
3		CLASS 200		4.64		0.00
4		CLASS 200		4.64		0.00
5		CLASS 200		4.64		0.00
6		CLASS 200		4.64		0.00
7		CLASS 200		4.64		0.00
8		CLASS 200		4.64		0.00
9		CLASS 200		4.64		0.00
10		CLASS 200		4.64		0.00
11		CLASS 200		4.64		0.00
12		CLASS 200		4.64		0.00
13		CLASS 200		4.64		0.00
14		CLASS 200		4.64		0.00
15		CLASS 200		4.64		0.00
16		CLASS 200		4.64		0.00
17		CLASS 200		4.64		0.00
18		CLASS 200		4.64		0.00
19		CLASS 200		4.64		0.00
20		CLASS 200		4.64		0.00
21		CLASS 200		4.64		0.00
21A		TOTAL LATERAL LENGTH			80	
22		TOTAL LATERAL PSI LOSS				0.4
23	6989	ELEVATION OF RCV				
24	6989	HIGHEST HEAD ON ZONE				
25	0	PSI GAIN / LOSS RCV TO HIGH HEAD				0.0
26	-6	ELEV PSI GAIN LOSS FROM METER TO RCV				-2.6
27	SIZE OF RCV 2"	REMOTE CONTROL VALVE LOSS				5.0
28		MIN. PSI REQUIRED BY HEAD				45.0
29		TOTAL RCV PSI LOSS				47.8
30	MAIN SIZE 3	MAIN LINE PSI LOSS	ENTER MAIN LINE PIPE LENGTH		2270	2.04
32						
33		TOTAL PSI LOSSES-LATERALS, MAIN, ELEVATION, RCV & HEAD PSI				49.8
34	FLOW SENSOR SIZE NA	FLOW SENSOR PSI LOSS				0.0
35	MASTER VALVE PSI LOSS					0.0
36	BACKFLOW PREV. SIZE 1	BACKFLOW PREV. PSI LOSS				13.0
37	COPPER PIPE FROM POC TO BACKFLOW PREVENTOR BFP TO MAIN LINE PSI LOSS				10	0.09
38	WATER METER SIZE 1	WATER METER PSI LOSS				12.0
39	SERVICE LINE PSI LOSS (FROM THE MAIN IN THE STREET TO THE WATER METER 35'+ -)				20	0.19
40	TOTAL OF ALL PSI LOSSES BEFORE 5% MARGIN					75.1
41	5% (EXTRA FOR FITTINGS AND MARGIN OF ERROR)					3.8
42	MINIMUM OPERATING PSI (FOR THIS SYSTEM TO WORK PROPERLY AT THE POC)					78.9

Know what's **below.** **Call** before you dig.

UTILITIES NOTE

VERIFY LOCATION AND DEPTH OF ALL UNDERGROUND UTILITIES PRIOR TO START OF WORK. CALL 811 FOR UTILITY LOCATES. TREE TRUNK PLACEMENT SHALL BE 6' MINIMUM DISTANCE FROM ANY GAS OR ELECTRIC AND 10' FROM GAS MAINS RATED AT 150PSI. FOR SANITARY SEWER AND WATER MAINLINES TREES SHALL NOT BE LOCATED WITHIN EASEMENTS AND WITHIN 15' OF ANY MAINLINE. ANY CONFLICT BETWEEN TREE LOCATIONS AND UTILITIES SHOWN ON PLANS SHALL BE RESOLVED WITH GENERAL CONTRACTOR PRIOR TO PLANTING. ALL ELECTRICAL VAULTS AND TRANSFORMERS SHALL BE KEPT CLEAR FROM PLANT MATERIAL PER COLORADO SPRINGS UTILITIES GUIDELINES "LANDSCAPING AROUND ELECTRICAL EQUIPMENT". SEE COLORADO SPRINGS UTILITIES CONSTRUCTION STANDARD DRAWINGS 18-302 FOR SPECIFIC CLEARANCE REQUIREMENTS. ALL SHRUBS TO BE LOCATED 3' CLEAR OF ALL FIRE HYDRANTS AT MATURE SIZE.

DOCUMENT NOTE

IRRESPECTIVE OF ANY OTHER TERM IN THIS DOCUMENT, LANDSCAPE ARCHITECT SHALL NOT CONTROL OR BE RESPONSIBLE FOR CONSTRUCTION MEANS, METHODS, TECHNIQUES, SCHEDULES, SEQUENCES OR PROCEDURES, OR FOR CONSTRUCTION SAFETY OR ANY OTHER RELATED PROGRAMS, OR FOR ANOTHER PARTIES' ERRORS OR OMISSIONS OR FOR ANOTHER PARTIES' FAILURE TO COMPLETE THEIR WORK OR SERVICES IN ACCORDANCE WITH LANDSCAPE ARCHITECT'S DOCUMENTS.

DEPN 23-0141

CITY STAMP

NOT FOR CONSTRUCTION

HIGHER GROUND DESIGNS, INC.
LANDSCAPE ARCHITECTURE, PLANNING & IRRIGATION DESIGN
5350 NORTH ACADEMY BLVD., STE. 207
COLORADO SPRINGS, CO 80918
Phone 719-477-1646
Fax 719-268-1122

HIGHER GROUND DESIGNS

ROYAL PINE APARTMENTS
4150-4180 ROYAL PINE DRIVE
COLORADO SPRINGS, CO

PREPARED FOR:
DREXEL, BARRELL & CO.

THESE DRAWINGS ARE THE PROPERTY OF HIGHER GROUND DESIGNS, INC. AND SHALL NOT BE USED FOR ANY OTHER PURPOSE WITHOUT WRITTEN AUTHORIZATION BY HIGHER GROUND DESIGNS, INC. THESE DRAWINGS ARE NOT FOR CONSTRUCTION.

JOB NUMBER 1129-23

REVISIONS

6-30-23	PER FINAL PLAN
8-11-23	PER CITY COMMENTS
9-7-23	PER DRB COMMENTS
9-11-23	PER DRB COMMENTS
9-26-23	PER CITY COMMENTS
10-25-23	PER CITY COMMENTS

ORIGINAL DATE 5-30-23

DRAWN BY JM

DESCRIPTION
IRRIGATION NOTES

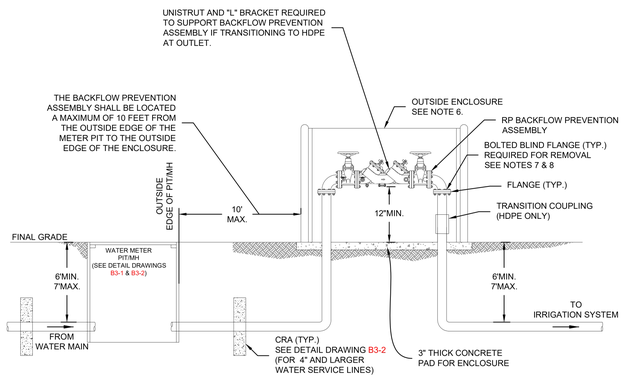

NOTES:

1. REFERENCE SECTION 2.7.N FOR BACKFLOW PREVENTION ASSEMBLY REQUIREMENTS.
2. NO DRAIN VALVES, OUTLETS OR BRANCH LINES SHALL BE LOCATED BEFORE THE APPROVED BACKFLOW PREVENTION ASSEMBLY.
3. THE APPROVED BACKFLOW PREVENTION ASSEMBLY SHALL BE INSTALLED WITH SOLDERED OR FLANGED ONLY.
4. THE BACKFLOW PREVENTION ASSEMBLY SHALL BE ON AN APPROVED REDUCED PRESSURE PRINCIPLE BACKFLOW PREVENTION ASSEMBLY.
5. REMOVABLE BACKFLOW PREVENTION ASSEMBLIES WILL BE EVALUATED ON A CASE BY CASE BASIS AND WILL ONLY BE APPROVED FOR SEASONAL IRRIGATION USERS.
6. SEASONAL BACKFLOW PREVENTION ASSEMBLIES SHALL BE LOCATED IN A LOCKABLE LID TO PROTECT FROM THEFT.
7. WHERE REMOVAL OF ASSEMBLY IS REQUESTED, FLANGES MUST BE INSTALLED ON THE IN-GROUND SUPPLY AND DISCHARGE PIPING SO THE EXPOSED PIPING OF THE WATER SYSTEM IS SEALED OFF WHILE THE BACKFLOW PREVENTER IS REMOVED.
8. DURING REMOVAL PERIOD, THE VALVE ON THE SUPPLY SIDE SHALL BE SHUT AND THE FLANGES SHALL BE SEALED WITH A BOLTED BLIND FLANGE.
9. FOR SERVICE LINES 4" AND GREATER, PIPE SHALL BE RESTRAINED BETWEEN THE METER PIT AND BACKFLOW PREVENTER.

Colorado Springs Utilities It's how we're all connected	TYPICAL NON-SINGLE-FAMILY RESIDENTIAL OUTDOOR WATER METER AND REMOVABLE BACKFLOW PREVENTION ASSEMBLY FOR IRRIGATION SYSTEMS	B4-10 DATED 09/2022

A BACKFLOW PREVENTION DEVICE (OUTDOOR)
NOT TO SCALE — INSTALL PER CITY OF COLORADO SPRINGS CODE

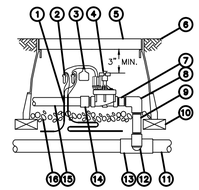

1. 30-INCH LENGTH OF 2-WIRE CABLE
2. WATERPROOF CONNECTION RAIN BIRD WC20 (TWO REQUIRED)
3. ID TAG: RAIN BIRD VID SERIES
4. REMOTE CONTROL VALVE: RAIN BIRD PEB/PESB/PESB-R WITH IVM
5. VALVE BOX WITH COVER: RAIN BIRD VB-STD
6. FINISH GRADE/TOP OF MULCH
7. PVC SCH 80 NIPPLE (CLOSE)
8. PVC SCH 40 ELL
9. PVC SCH 80 NIPPLE (LENGTH AS REQUIRED)
10. BRICK (1 OF 4)
11. PVC MAINLINE PIPE
12. SCH 80 NIPPLE (2-INCH LENGTH, HIDDEN) AND SCH 40 ELL
13. PVC SCH 40 TEE OR ELL
14. PVC SCH 40 MALE ADAPTER
15. PVC LATERAL PIPE
16. 3-INCH MINIMUM DEPTH OF 3/4-INCH WASHED GRAVEL

B ELECTRIC REMOTE-CONTROL VALVE
N.T.S. — 03-27-2020
PEB OR PESB SERIES WITH IVM

IRR 1129-23V.1

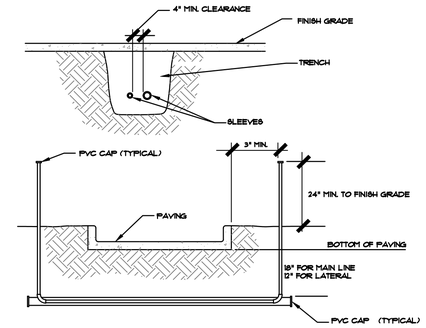

NOTES:
- ALL PVC IRRIGATION SLEEVES TO BE CLASS 200 PIPE.
- ALL JOINTS TO BE SOLVENT WELDED AND WATERTIGHT.
- WHERE THERE IS MORE THAN ONE SLEEVE, EXTEND THE SMALLER SLEEVE TO 24" MIN ABOVE FINISH GRADE.
- COMPACT BACKFILL SOIL TO 95%

F SLEEVING DETAIL
NOT TO SCALE

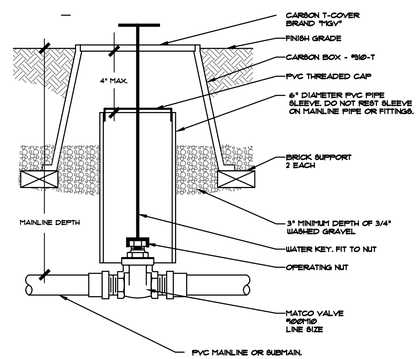

NOTES:
- WRAP ALL THREADS WITH TELFON TAPE.
- COMPACT SOILS AROUND VALVE BOX TO 90% OF MAXIMUM DRY DENSITY.
- FLUSH ALL MAINLINE PIPING PRIOR TO INSTALLING VALVES.

G ISOLATION VALVE DETAIL (3"or less)
NOT TO SCALE

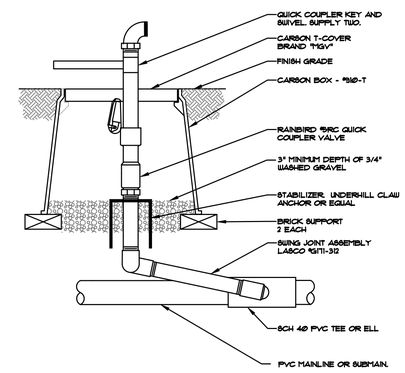

NOTE: SUPPLY OWNER WITH TWO KEYS AND 100 LF SWAN PRO HEAVY DUTY RUBBER HOSE

H QUICK COUPLER ASSEMBLY DETAIL
NOT TO SCALE

NOTES: • A SWING PIPE MAY BE USED WITH FLOWS LESS THAN 4 GPM.

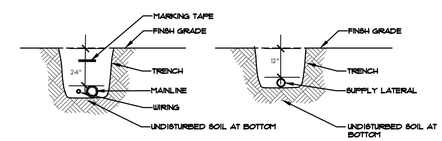

NOTE:
INSTALL PIPING NO LESS THAN 12" LATERAL HORIZONTAL CLEARANCE AND 6" VERTICAL CLEARANCE.

USE CRISSEY WATER LINE MARKING TAPE WITH LABEL "BURIED WATER PIPE. INSTALL ALONG TRENCH AT CENTER OF PIPING, 8" DEPTH, AND EXPOSE END AT ALL EQUIPMENT.

IN ROCKY SOIL ENVIRONMENTS INSTALL 3"-6" SAND BED

EVALUATE EXISTING SOIL FOR BACKFILL. IF SOIL IS UNSUITABLE REMOVE AND REPLACE WITH SUITABLE SOIL FOR PROPER COMPACTION.

PIPE SIZING CHART: CLASS 200 PIPE

Pipe Size	Short distance 130' (GPM)	Medium distance 210' (GPM)	Long Distance 350' (GPM)
3/4"	10	8	6
1"	17	15	12
1-1/4"	27	27	22
1-1/2"	36	36	30
2"	56	56	56
2-1/2"	83	83	83
3"	123	123	123

J LATERAL PIPE TRENCHING DETAIL
NOT TO SCALE

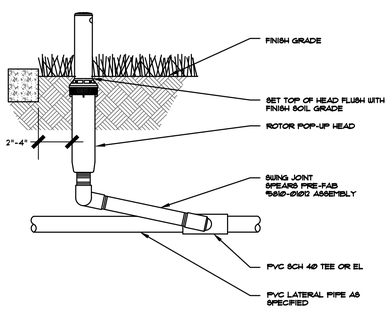

K ROTOR POP-UP HEAD DETAIL
NOT TO SCALE

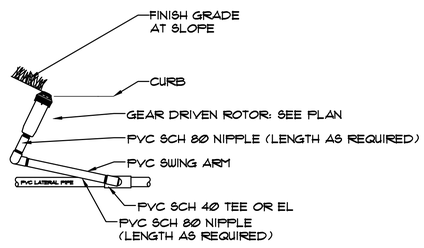

L GEAR DRIVEN SPRINKLER-SLOPE
NOT TO SCALE

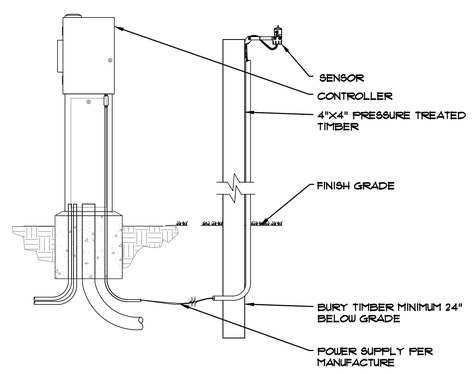

M RAIN SENSOR
NOT TO SCALE

Know what's below. Call before you dig.

UTILITIES NOTE
VERIFY LOCATION AND DEPTH OF ALL UNDERGROUND UTILITIES PRIOR TO START OF WORK. CALL 811 FOR UTILITY LOCATES. TREE TRUNK PLACEMENT SHALL BE 6' MINIMUM DISTANCE FROM ANY GAS OR ELECTRIC AND 10' FROM GAS MAINS RATED AT 150PSI. FOR SANITARY SEWER AND WATER MAINLINES TREES SHALL NOT BE LOCATED WITHIN EASEMENTS AND WITHIN 15' OF ANY MAINLINE. ANY CONFLICT BETWEEN TREE LOCATIONS AND UTILITIES SHOWN ON PLANS SHALL BE RESOLVED WITH GENERAL CONTRACTOR PRIOR TO PLANTING. ALL ELECTRICAL VAULTS AND TRANSFORMERS SHALL BE KEPT CLEAR FROM PLANT MATERIAL PER COLORADO SPRINGS UTILITIES GUIDELINES "LANDSCAPING AROUND ELECTRICAL EQUIPMENT". SEE COLORADO SPRINGS UTILITIES CONSTRUCTION STANDARD DRAWINGS 18-302 FOR SPECIFIC CLEARANCE REQUIREMENTS. ALL SHRUBS TO BE LOCATED 3' CLEAR OF ALL FIRE HYDRANTS AT MATURE SIZE.

DOCUMENT NOTE
IRRESPECTIVE OF ANY OTHER TERM IN THIS DOCUMENT, LANDSCAPE ARCHITECT SHALL NOT CONTROL OR BE RESPONSIBLE FOR CONSTRUCTION MEANS, METHODS, TECHNIQUES, SCHEDULES, SEQUENCES OR PROCEDURES, OR FOR CONSTRUCTION SAFETY OR ANY OTHER RELATED PROGRAMS, OR FOR ANOTHER PARTIES' ERRORS OR OMISSIONS OR FOR ANOTHER PARTIES' FAILURE TO COMPLETE THEIR WORK OR SERVICES IN ACCORDANCE WITH LANDSCAPE ARCHITECT'S DOCUMENTS.

DEPN 23-0141

HIGHER GROUND DESIGNS, INC.
LANDSCAPE ARCHITECTURE, PLANNING & IRRIGATION DESIGN
5350 NORTH ACADEMY BLVD., STE. 207
COLORADO SPRINGS, CO 80918
Phone 719-477-1646
Fax 719-288-1122

HIGHER GROUND DESIGNS

ROYAL PINE APARTMENTS
4150-4180 ROYAL PINE DRIVE
COLORADO SPRINGS, CO

PREPARED FOR:
DREXEL, BARRELL & CO.

THESE DRAWINGS ARE THE PROPERTY OF HIGHER GROUND DESIGNS, INC. AND SHALL NOT BE USED FOR ANY OTHER PURPOSE WITHOUT WRITTEN AUTHORIZATION FROM HIGHER GROUND DESIGNS, INC. THESE DRAWINGS ARE NOT FOR CONSTRUCTION.

CITY STAMP

NOT FOR CONSTRUCTION

JOB NUMBER 1129-23

REVISIONS

6-30-23	PER FINAL PLAN
8-11-23	PER CITY COMMENTS
9-7-23	PER DRB COMMENTS
9-11-23	PER DRB COMMENTS
9-26-23	PER CITY COMMENTS
10-25-23	PER CITY COMMENTS

ORIGINAL DATE 5-30-23

DRAWN BY JM

DESCRIPTION
IRRIGATION PLAN DETAILS

SHEET NO.
29 OF 30

NOTES: DRIP EMITTERS SHALL BE PLACED APPROX. 2" OUTSIDE THE EDGE OF THE ROOT BALL

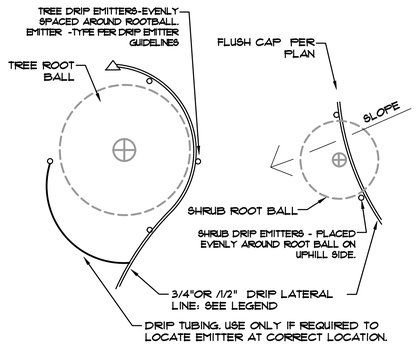

N DRIP EMITTER PLACEMENT

NOT TO SCALE SEE GUIDLINES FOR EMITTER QUANTITY

NOTES: NOTE: DRIP EMITTERS SHALL BE PLACED 2" OUTSIDE THE EDGE OF THE ROOT BALL

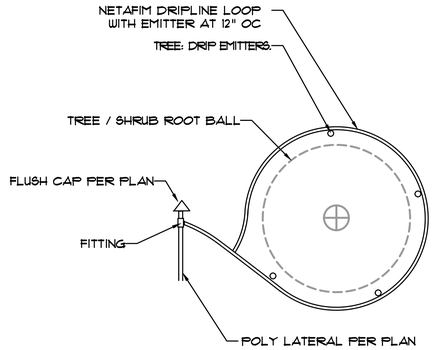

P DRIP EMITTER PLACEMENT FOR SEED

NOT TO SCALE

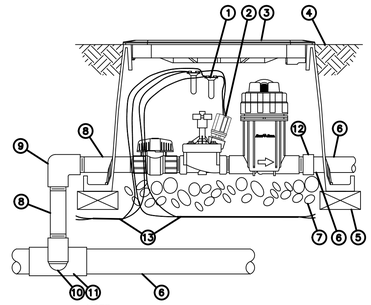

NOTE:
1. COIL AN ADDITIONAL 3-FEET OF TWO-WIRE CABLE IN VALVE BOX FOR EASY SERVICING.

1. WATERPROOF SPLICE CONNECTION: RAIN BIRD WC20 (TWO REQUIRED)
2. RAIN BIRD DRIP KIT: XCZ-100-PRB-COM WITH IVM-SOL
3. VALVE BOX WITH COVER: RAIN BIRD VB-STD OR APPROVED EQUAL
4. FINISH GRADE OR TOP OF MULCH
5. BRICK (1 OF 4)
6. PVC PIPE
7. 3-INCH MINIMUM DEPTH OF 3/4-INCH WASHED GRAVEL
8. PVC SCH 80 NIPPLE 1"
9. PVC SCH 80 ELBOW
10. PVC SCH 80 NIPPLE (2" LENGTH, HIDDEN) AND PVC SCH 80 ELBOW
11. PVC SCH 80 TEE OR ELBOW
12. PVC SCH 40 MALE ADAPTER
13. TWO-WIRE CABLE BETWEEN DEVICES (FIELD DECODER, SENSOR DECODER, LINE SURGE PROTECTOR CONTROLLER)

P XCZ-100-PRB-COM WITH IVM-SOL

N.T.S.

IRR 1129-23V.1 – 2020-11-16

NOTES: • DRIP PIPING IS TO BE STAKED TO GROUND SURFACE EVERY 4-6'. MULCH IS TO BE INSTALLED TO COVER ALL PIPING AND TUBING. RECOMMEND PIPE INSTALLED OVER WEED BARRIER.

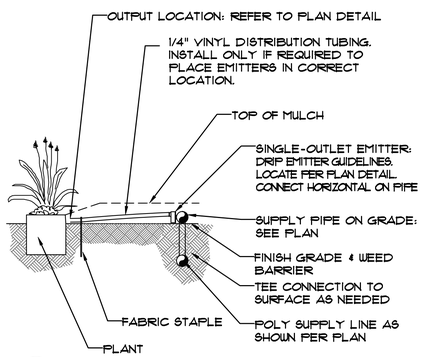

Q TYPICAL EMITTER ASSEMBLY

NOT TO SCALE

NOTES: • DRIP FLUSH CAP AND BOX SHALL BE INSTALLED AT THE END OF EACH DRIP SUPPLY LINE AT ENDS.

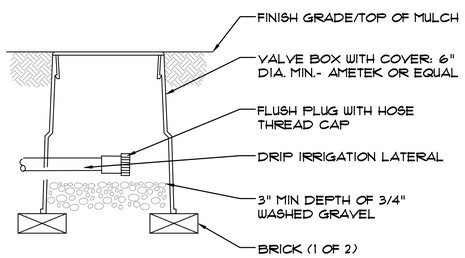

R DRIP FLUSH CAP

NOT TO SCALE

IRRIGATION SCHEDULE

ZONE	TYPE	FLOW	PRECIP RATE	RUN TIME	CYCLE	TYPE	OPERATION PSI	DAYS/WEEK START
		GPM	INCHES/HOUR	MINUTES	GALLONS			
1	ROTATOR	7.5	.70	15	113	SOD	45	3
2	ROTOR	27.5	.34	18	495	SOD	45	3
3	ROTOR	27.5	.34	18	495	SOD	45	3
4	ROTATOR	26.0	.70	5	130	GRASS SEED	45	2
5	ROTOR	21.8	.34	7	153	GRASS SEED	45	2
6	ROTATOR	26.5	.70	15	398	SOD	45	3
7	ROTOR	20.0	.34	7	145	GRASS SEED	45	2
8	ROTATOR	6.5	.70	15	98	SOD	45	3
9	ROTATOR	16.0	.70	15	240	SOD	45	3
10	ROTATOR	6.0	.70	15	90	SOD	45	3
11	ROTATOR	10.0	.70	15	150	SOD	45	3
12	ROTOR	27.80	.34	18	500	SOD	45	3
13	ROTOR	32.4	.34	18	583	SOD	45	3
14	ROTOR	30.5	.34	7	214	GRASS SEED	45	2
15	ROTATOR	18.5	.70	15	276	SOD	45	3
16	ROTOR	23.8	.34	7	167	GRASS SEED	45	1
17	DRIP	3-7(5)	–	60	300	PLANTING	30	1
18	DRIP	3-7(5)	–	60	300	PLANTING	30	1
19	DRIP	3-7(5)	–	60	300	PLANTING	30	1
20	DRIP	3-7(5)	–	60	300	PLANTING	30	1
21	DRIP	3-7(5)	–	60	300	PLANTING	30	1
22	DRIP	3-7(5)	–	60	300	PLANTING	30	1
23	DRIP	3-7(5)	–	60	300	PLANTING	30	1
24	DRIP	3-7(5)	–	60	300	PLANTING	30	1
25	DRIP	3-7(5)	–	60	300	PLANTING	30	1
26	DRIP	3-7(5)	–	60	300	PLANTING	30	1
27	DRIP	3-7(5)	–	60	300	PLANTING	30	1

TOTAL APPROX. HOURS RUN TIME: 14.5

TOTAL IRRIGATED AREA: 97,500 SF

DRIP EMITTERS

DRIP EMITTERS FOR TREES, SHRUBS, ORNAMENTAL GRASSES AND PERENNIALS SHALL BE INSTALLED PER DETAILS ON THIS SHEET. CONTRACTOR IS RESPONSIBLE FOR ADJUSTING EMITTER QUANTITY SO THAT EACH PLANT TYPE RECEIVES THE CORRECT WATER REQUIREMENT BASED ON ZONE RUN TIME AND PLANT WATER REQUIREMENTS. SEE DRIP EMITTER GUIDELINES. EXCEPT FOR PERENNIALS ALL SHRUBS SHALL RECEIVE TWO EMITTERS, AND TREES SHALL RECEIVE MINIMUM FOUR EMITTERS.

DRIP EMITTER GUIDELINES

PLANT MATERIAL	EMITTER QUANTITY	OUTPUT (GPH)
1 GAL. PERENNIAL (COLOR)	1 EACH - .5 GPH	.5
1 GAL. ORNAMENTAL GRASS	2 EACH - .5 GPH	1
5 GAL. ORNAMENTAL GRASS	2 EACH - 1 GPH	2
5 GAL. EVERGREEN SHRUB	2 EACH - 1 GPH	2
5 GAL. DECIDUOUS SHRUB	2 EACH - 1 GPH	2
HIGH WATER DECIDUOUS SHRUB	2 EACH - 2 GPH	4
6' B&B EVERGREEN TREE	4 EACH - 1 GPH	4
HIGH WATER EVERGREEN TREE	4 EACH - 2 GPH	8
1 1/2" CAL. DECIDUOUS TREE	4 EACH - 1 GPH	4
HIGH WATER DECIDUOUS TREE	4 EACH - 2 GPH	8

IRRIGATION SCHEDULE NOTES

THE SCHEDULING TIMES ARE BASED ON AN ET RATE .19 AND AN IRRIGATION EFFICIENCY OF 85%. TIMES SHALL BE ADJUSTED ACCORDINGLY FOR SEASONAL CHANGES. RAIN SENSOR SHALL BE SET FOR AUTOMATIC SHUT OFF AT 1/2" RAINFALL.

THE RUN TIMES ARE MINUTES PER DAY. EACH VEGETATION TYPE HAS A DIFFERENT WEEKLY WATER REQUIREMENT THAT SHOULD BE FULFILLED BY A DIFFERENT NUMBER OF SCHEDULED RUN TIMES.

NEWLY PLANTED TURF AREAS SHOULD BE IRRIGATED ON A DAILY BASIS THE FIRST GROWING SEASON. DURING THE SECOND SEASON, TURF AREAS SHOULD BE IRRIGATED EVERY OTHER DAY. ESTABLISHED BLUE GRASS TURF AREAS SHOULD BE IRRIGATED EVERY OTHER DAY. ESTABLISHED FESCUE GRASS AND NATIVE GRASS TURF AREAS SHOULD BE IRRIGATED EVERY THIRD DAY.

NEW LANDSCAPE PLANTS SHALL BE IRRIGATED EVERY OTHER DAY FOR THE FIRST GROWING SEASON. DURING ALL SUBSEQUENT SEASONS LANDSCAPE PLANTS SHALL BE IRRIGATED EVERY THIRD DAY.

THE RUN TIMES ARE INTENDED FOR SUMMER WATERING APPLICATIONS. RUN TIMES SHALL BE ADJUSTED FOR SEASONAL REQUIREMENTS. SPRING RUN TIMES SHALL BE SET AT 85% OF SUMMER RUN TIMES. FALL RUN TIMES SHALL BE SET AT 80% OF SUMMER RUN TIMES.

AN ESTABLISHMENT PERMIT AND POSSIBLY AN ALLOCATION PLAN SHALL BE REQUIRED FROM COLORADO SPRINGS UTILITIES.

811 Know what's below. Call before you dig.

UTILITIES NOTE

VERIFY LOCATION AND DEPTH OF ALL UNDERGROUND UTILITIES PRIOR TO START OF WORK. CALL 811 FOR UTILITY LOCATES. TREE TRUNK PLACEMENT SHALL BE 6' MINIMUM DISTANCE FROM ANY GAS OR ELECTRIC AND 10' FROM GAS MAINS RATED AT 150PSI. FOR SANITARY SEWER AND WATER MAINLINES TREES SHALL NOT BE LOCATED WITHIN EASEMENTS AND WITHIN 15' OF ANY MAINLINE. ANY CONFLICT BETWEEN TREE LOCATIONS AND UTILITIES SHOWN ON PLANS SHALL BE RESOLVED WITH GENERAL CONTRACTOR PRIOR TO PLANTING. ALL ELECTRICAL VAULTS AND TRANSFORMERS SHALL BE KEPT CLEAR FROM PLANT MATERIAL PER COLORADO SPRINGS UTILITIES GUIDELINES "LANDSCAPING AROUND ELECTRICAL EQUIPMENT". SEE COLORADO SPRINGS UTILITIES CONSTRUCTION STANDARD DRAWINGS 18-302 FOR SPECIFIC CLEARANCE REQUIREMENTS. ALL SHRUBS TO BE LOCATED 3' CLEAR OF ALL FIRE HYDRANTS AT MATURE SIZE.

DOCUMENT NOTE

IRRESPECTIVE OF ANY OTHER TERM IN THIS DOCUMENT, LANDSCAPE ARCHITECT SHALL NOT CONTROL OR BE RESPONSIBLE FOR CONSTRUCTION MEANS, METHODS, TECHNIQUES, SCHEDULES, SEQUENCES OR PROCEDURES, OR FOR CONSTRUCTION SAFETY OR ANY OTHER RELATED PROGRAMS, OR FOR ANOTHER PARTIES' ERRORS OR OMISSIONS OR FOR ANOTHER PARTIES' FAILURE TO COMPLETE THEIR WORK OR SERVICES IN ACCORDANCE WITH LANDSCAPE ARCHITECT'S DOCUMENTS.

DEPN 23-0141

CITY STAMP

NOT FOR CONSTRUCTION

HIGHER GROUND DESIGNS, INC.
LANDSCAPE ARCHITECTURE, PLANNING & IRRIGATION DESIGN
5350 NORTH ACADEMY BLVD., STE. 207
COLORADO SPRINGS, CO 80918
Phone 719-477-1646
Fax 719-288-1122

HIGHER GROUND DESIGNS

ROYAL PINE APARTMENTS
4150-4180 ROYAL PINE DRIVE
COLORADO SPRINGS, CO

PREPARED FOR:
DREXEL, BARRELL & CO.

THESE DRAWINGS ARE THE PROPERTY OF HIGHER GROUND DESIGNS, INC. AND SHALL NOT BE USED FOR ANY OTHER PURPOSE WITHOUT WRITTEN AUTHORIZATION FROM HIGHER GROUND DESIGNS, INC.
THESE DRAWINGS ARE NOT FOR CONSTRUCTION.

JOB NUMBER 1129-23

REVISIONS

6-30-23	PER FINAL PLAN
8-11-23	PER CITY COMMENTS
9-7-23	PER DRB COMMENTS
9-11-23	PER DRB COMMENTS
9-26-23	PER CITY COMMENTS
10-25-23	PER CITY COMMENTS

ORIGINAL DATE 5-30-23

DRAWN BY JM

DESCRIPTION
IRRIGATION PLAN DETAILS

SHEET NO.
30 OF 30