ABBA EYE CARE CENTER

LOT 1 of COLORADO COUNTRY FILING No 15

SHEET INDEX	
SHEET	DESCRIPTION
C-1	COVER SHEET & SITE PLAN
C-2	GRADING PLAN
C-3	UTILITY & PUBLIC IMPROVEMENT PLAN
C-4	EROSION CONTROL PLAN
C-5	DETAILS & SECTIONS
C-6	PHOTOMETRIC PLAN
LP-01 THROUGH LP-02	LANDSCAPING PLAN
DP-A-1	DEVELOPMENT PLAN FLOOR PLAN
DP-A-2	DEVELOPMENT PLAN ELEVATIONS

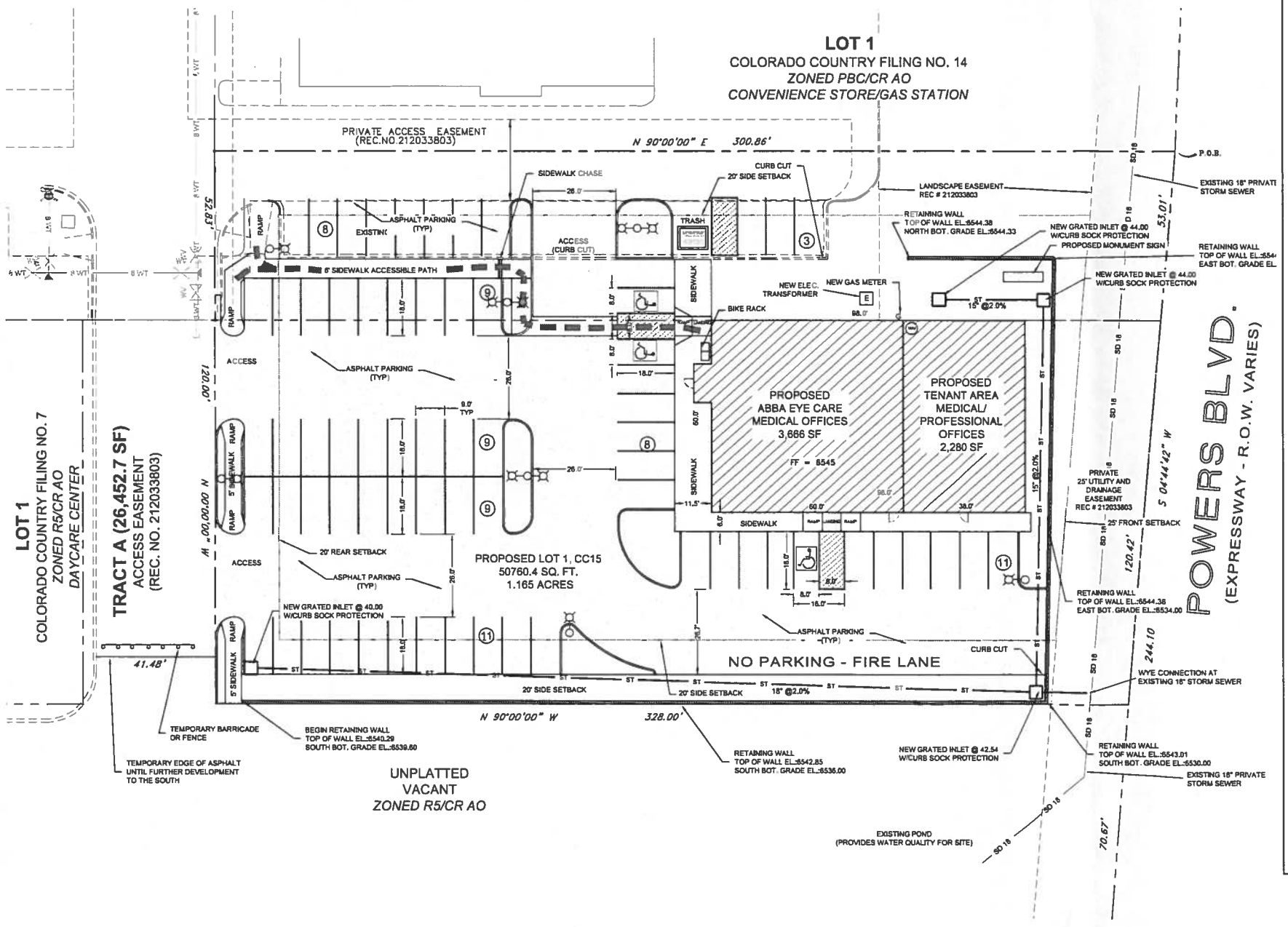

SITE PLAN

SCALE : 1" = 20'

HANDICAPPED PARKING SPACE DESIGN CRITERIA

1. Ramps shall not be placed in handicapped access aisle, but shall be placed within the adjoining sidewalk
2. Access aisles may not exceed a 2% grade in any direction.
3. Handicapped ramps shall not exceed 8% grade in the direction of travel.
4. The minimum width for handicapped ramps is 36 inches clear.
5. The sides of ramps shall not exceed a grade of 10% unless protected with a handrail.
6. Handicapped parking shall meet all other applicable City, ADA, and/r ANSI standards

DEVELOPMENT PLAN INFORMATION

Existing Zoning: R5/CR AO (Ordinance No. 80-296)
Conditions of Approval:
1) Avigation easement to be filed with plat.
2) Noise attenuation construction methods, as approved by FAA, required to mitigate noise impacts.

and PBC/CR AO (Ordinance No. 80-297)
Conditions of Approval:
1) Only one access to North Carefree Circle.
2) No access to be allowed to Powers Blvd.
3) Avigation easement to be filed with plat.
4) Noise attenuation construction methods, as approved by FAA, required to mitigate noise impacts.

Proposed Zoning: OC/CR AO (Ordinance No. _____)

Conditions of Record:

1. Only one access to North Carefree Circle.
2. No access to be allowed to Powers Blvd.
3. All permitted uses under the OC zone district allowed except the following:

Detoxification Center
Automotive Rentals
Specialty Food Sales
Neighborhood Serving Retail
Drive-In or Fast Food
Quick-Serve Restaurant
Sit-Down restaurant

Concept Plan: Southwest Powers & North Carefree AR CP 11-00482-AIMJ14
Master Plan: Colorado Country Master Plan
Associated Districts: Powers Metropolitan District
Use: Medical office,lab or clinic / General Office

Public Facilities Required: Water, Wastewater, Electric, Natural Gas, Phone/Data

Building Height: Allowed 45', Proposed 21'-6"

Setbacks:
Front (East) Setback: 25' Required
Side (North) Setback: 20' Required
Side (South) Setback: 20' Required
Rear (West) Setback: 20' Required

Landscape Setbacks:
Powers Blvd.: 25' Required

Owner Name and Address:
SW Carefree & Powers, Inc.
c/o Deforme Management
P.O. Box 75004
Colorado Springs, CO 80970

Parcel Number: 6325400021 (Part) & 6325418005
Acreage Per Plat: 50,737 SF (1.16 acres more-or-less)
Current Use: Vacant
Gross Existing Building Area: 0 SF
Proposed Principal Use: Medical Office, Lab, Clinic and/or General Office
Percentage of Site Covered with Structures: Approx. 12%
Percentage of Site Covered with Pavement: Approx. 59%

Flood Plain: According to the national Flood Insurance Program Flood Insurance Rate map for El Paso County, Colorado and Incorporated areas panel 538 of 1300 map #08041C0538 the site is not located in a flood plain.

Required Parking Spaces:
Medical Offices, Labs & Clinics-(1 spc /200 S.F.): 5,946 SF/200= 30
H.C.-(1 Space/25 Required): 1 per 25 = 2
Total Parking Space Required: 30:2 HC
Total Parking Space Provided: 68:3 HC

Approximate Schedule for Development: October 2016

Development Applicant
Company:
Abba Eye Care Center
1130 Lake Plaza Dr. Colorado Springs CO, CO 80906

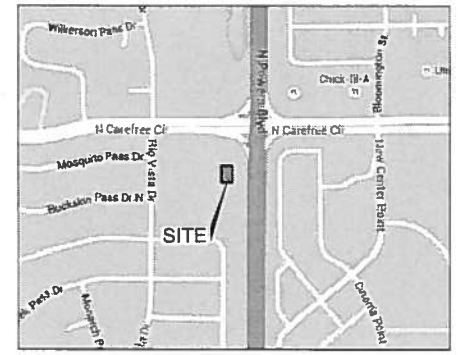

VICINITY MAP
N.T.S.

LEGEND

PROPERTY LINE
LANDSCAPE & TRAIL EASEMENT LINE
ADJACENT PROPERTY LINE
EXISTING CURB & GUTTER
NEW CONCRETE CURB
NEW CONCRETE PARKING LOT
PROPOSED BUILDING Re: ARCH
TRASH ENCLOSURE
HANDICAPPED PARKING SPACE
ORNAMENTAL PARKING LOT LIGHTING

LEGAL DESCRIPTION

THAT PORTION OF SECTION 25, TOWNSHIP 13 SOUTH, RANGE66 WEST OF THE 6TH P.M., EL PASO COUNTY, COLORADO, MORE PARTICULARLY DESCRIBED AS FOLLOWS:

BASIS OF BEARINGS: ALL BEARINGS USED IN THESE DESCRIPTIONS ARE RELATIVE TO THOSE SHOWN ON "COLORADO COUNTRY FILING NO. 14A" AS RECORDED AT RECEPTION NUMBER 215713602 OF THE RECORDS OF EL PASO COUNTY, COLORADO.

BEGINNING AT THE MOST NORTHEASTERLY CORNER OF LOT 2 OF SAID "COLORADO COUNTRY FILING NO. 14A", POINT ALSO BEING ON THE WESTERLY RIGHT OF WAY OF "POWERS BOULEVARD" AS RECORDED AT RECEPTION NUMBER 207100412 OF SAID RECORDS;

THENCE ALONG SAID WESTERLY RIGHT OF WAY FOR THE FOLLOWING TWO (2) COURSES;

1. S 04°44'42" W, 53.01 FEET TO THE SOUTHEAST CORNER OF LOT 2 ON SAID "COLORADO COUNTRY 14A";

2. S 04°44'42" W, 120.42 FEET;

THENCE N 90°00'00" W, 328.00 FEET TO THE SOUTHEAST CORNER OF "COLORADO COUNTRY NO. 7" AS RECORDED IN PLAT BOOK R-3 AT PAGE 13 OF SAID RECORDS;

THENCE N 00°00'00" E, 120.00 FEET TO THE NORTHEAST CORNER OF SAID "COLORADO COUNTRY NO. 7";

THENCE N 90°00'00" E, 41.48 FEET;

THENCE N 00°00'00" E, 52.83 FEET TO THE NORTHWEST CORNER OF SAID LOT 2 OF "COLORADO COUNTRY NO. 14A";

THENCE N 90°00'00" E, 300.86 FEET, TO THE POINT OF BEGINNING, CONTAINING 55,738.4 SQ.FT. (1.280 ACRES) MORE OR LESS.

AR DP 16-00066

REVISIONS		
#	Date	Comment
-	-	-

Gagliano Engineering, Inc. - (719) 547-7073
MAIL: P.O. Box 2520, Pueblo, CO 81004
OFFICE: 1740 Eagleridge Blvd. Suite #150, Pueblo, CO 81008

ABBA EYE CARE
COVER SHEET & SITE PLAN
ABBA_ADDRESS
ABBA_SUB, COLORADO SPRINGS CO 80901

	PROJECT NO.: 2016-006	
DRAWN BY: lvg	DATE: 01/22/16	SCALE: as shown
		DRAWING NO.: 2016-006-basemap.dwg
CHECKED BY: lvg	DATE: 06/16/16	SHEET NO.: C-1

FIGURE 4

GENERAL NOTES

1. All materials, methods of construction, preparation, mixing,placement, finishing and testing shall conform to applicable sections of the City of Colorado Springs . standards with the most current "Standard Construction Specifications and Standard Details", current edition, unless stated otherwise in the plans.
2. Cuts in asphalt shall be clean, straight, vertical and shall be accomplished by saw cutting, use of a cutting wheel, or other method as approved by the City of Colorado Springs Public Works Department.
3. Subgrade in areas subject to reconstruction shall be scarified to a depth of 12 inches, thoroughly cultivated, moistened and recompacted to a minimum of 95% of the Standard Proctor. Testing shall be the responsibility of the contractor as directed by the City of Colorado Springs Department of Public Works.
4. Depth of moisture density control shall be as follows: Base of cuts 0.50 ft., Base of fills 0.50 ft.
5. Traffic control shall conform to the "Manual on Uniform Traffic Control Devices", current edition.
   A. Provide proper signing at all intersections.
   B. Contractor will be responsible for supplying a traffic control plan for the entire project subject to the approval by the City of Colorado Springs Public Works Department.
   C. All traffic control devices and labor will be supplied by the contractor.
6. The contractor shall be responsible for the disposal of all waste material including base, dirt, concrete, pavement, etc.
7. The location of existing underground utilities are shown approximately and may not include all utilities. The excavation contractor shall determine the exact location of ALL existing utilities before commencing work. The contractor agrees to be fully responsible for any and all damages which might be occasioned by his failure to exactly locate and preserve any and all underground utilities. Utility Notification Center of Colorado 1-800-922-1987.
8. The Contractor shall be responsible for construction of all improvements, unless otherwise noted.
9. The Contractor shall be responsible for all erosion and sediment control associated with construction of this project.
10. The Contractor shall be responsible to repair or replace any roadways, drainage structures, or utilities damaged or relocated in the process of executing this plan.
11. Water Mains and appurtenances shall be installed in accordance with the City of Colorado Utilities Specifications.
12. Service lines shall be installed prior to road paving.
13. The contractor shall provide copies of the following material tests and certifications to the City of Colorado Springs Public Works Department.
    A. Tests for density control during compaction;
       1. Backfill of utility trenches within R.O.W.
       2. Subgrade
       3. Base
    B. Tests for determining maximum density at optimum moisture;
    C. Asphalt mix design;
    D. Concrete mix design and 7 day compression tests;
    E. Aggregate mix gradation.
14. The Contractor shall be responsible for removal and proper disposal of existing asphalt.
15. The contractor shall adjust Water Valve Boxes as necessary and Sanitary Sewer Manhole rims using concrete grade rings.
16. Prior to commencing work, a licensed, bonded and insured contractor will obtain an excavation permit from City of Colorado Springs Public Works Department.
17. Contractor will provide a minimum of seven (7) days notice to the appropriate governing agency prior to commencing work.
18. The developer shall designate a project manager to coordinate construction and inspection. The project manager shall schedule a preconstruction meeting prior to commencing construction that includes, at a minimum, representatives from the City of Colorado Springs Public Works Dept., affected utility companies and contractor(s) performing the work.
19. Provide flowable fill where storm sewer inlet runs lie beneath handicap ramps.
20. Contractor is responsible for any and all temporary or permanent shoring.
21. Construction staging areas and location of storage equipment maintenance and temporary disposall areas to be determined by Contractor and approved by Engineer.
22. Location of areas for topsoil and subsoil to be designated by Contractor and approved by Engineer.

STANDARD GRADING, EROSION, AND STORMWATER QUALITY CONTROL NOTES

1. Any land disturbance by any owner developer, builder, contractor, or other person shall comply with the Basic Grading, Erosion and Stormwater Quality Control Requirements and General Prohibitions noted in the Drainage Criteria Manual Volume II.
2. No clearing, grading, excavation, filling, or other land disturbing activities shall be permitted until signoff and acceptance of the Grading Plan and Erosion and Stormwater Quality Control Plan is received from City Engineering.
3. The Installation of the first level of temporary erosion control facilities and BMP's shall be installed and inspected prior to any earth disturbance operations taking place. Call City Stormwater Inspections, 385-5980, 48 hours prior to construction.
4. Sediment (mud and dirt) transported onto a public road, regardless of the size of the site, shall be cleaned immediately.
5. Concrete wash water shall not be discharged to or allowed to runoff to State Waters, including any surface or subsurface storm drainage system or facilities.
6. Soil erosion control measures for slopes, channels, ditches, or any disturbed land area shall be completed within twenty-one (21) calendar days after final grading or final earth disturbance has been completed. Disturbed areas and stockpiles which are not at final grade but will remain dormant for longer than 30 days shall also be mulched within 21 days after interim grading. An area that is going to remain in an interim state for more than 60 days shall also be seeded. All temporary soil erosion control measures and BMP's shall be maintained until permanent soil erosion control measures are implemented.
7. The grading and erosion control plan will be subject to re-review and re-acceptance by the City of Colorado Springs Engineering should any of the following occur: grading does not commence within 12 months of the city Engineer's acceptance of the plan, a change in property ownership, proposed development changes, or proposed grading revisions.
8. The Plan shall not change the depth of cover, or access to utility lines. Acceptance of this plan does not constitute approval to grade in any utility easement or right-of-way. Approvals to grade with utility easements must be obtained from the appropriate utility company. It is not permissible for any person to modify the grade of the earth on any Colorado Springs Utilities easement or right-of-way without their written approval. The Plan shall not increase or divert water towards utility facilities. Any changes to utility facilities to accommodate the plan must be approved by the affected utility owner prior to implementing the plan. The cost to relocate or protect utilities or to provide interim access is the applicant's expense.

SIGNATURE BLOCKS

ENGINEER'S STATEMENT

This Erosion and Stormwater Quality Control/Grading Plan was prepared under my direction and supervision and is correct to the best of my knowledge and belief. If such work is performed in accordance with the grading and erosion control plan, the work will not become a hazard to life and limb, endanger property, or adversely affect the safety, use, or stability or a public way, drainage channel, or other property.

Signature: ______________________ Date: ______________

Printed Name: ______________________ Seal

DEVELOPER'S/OWNER'S STATEMENT

The owner will comply with the requirements of the Erosion and Stormwater Quality Control Plan including temporary BMP inspection requirements and final stabilization requirements. I acknowledge the responsibility to determine whether the construction activities on these plans require Colorado Discharge Permit System (CDPS) permitting for Stormwater discharges associated with Construction Activity.

Developer/Owner Signature: ______________________

Name of Developer/Owner: ______________________ Date: ______________

DBA: ______________________ Phone: ______________

Title: ______________________ Email: ______________

Address: ______________________ Fax: ______________

CITY OF COLORADO SPRINGS GRADING AND EROSION CONTROL REVIEW

This grading plan is filed in accordance with section 7.7.1503 (enacted as ord. 85-56) of the code of the City of Colorado Springs, 2001, as amended. Erosion control is reviewed in accordance with the Drainage Criteria Manual, Vol. 1 (October 1994) and Vol. II (Aug. 2002); latest revisions

For the City Engineer: ______________________ Date: ______________

DESCRIPTION OF CONSTRUCTION ACTIVITIES

Anticipated starting and completion time period of site grading:

Expected date on which the final stabilization will be completed:

Areas-Total area of the site to be cleared, excavated, or graded:

Receiving Waters-Name of receiving waters:

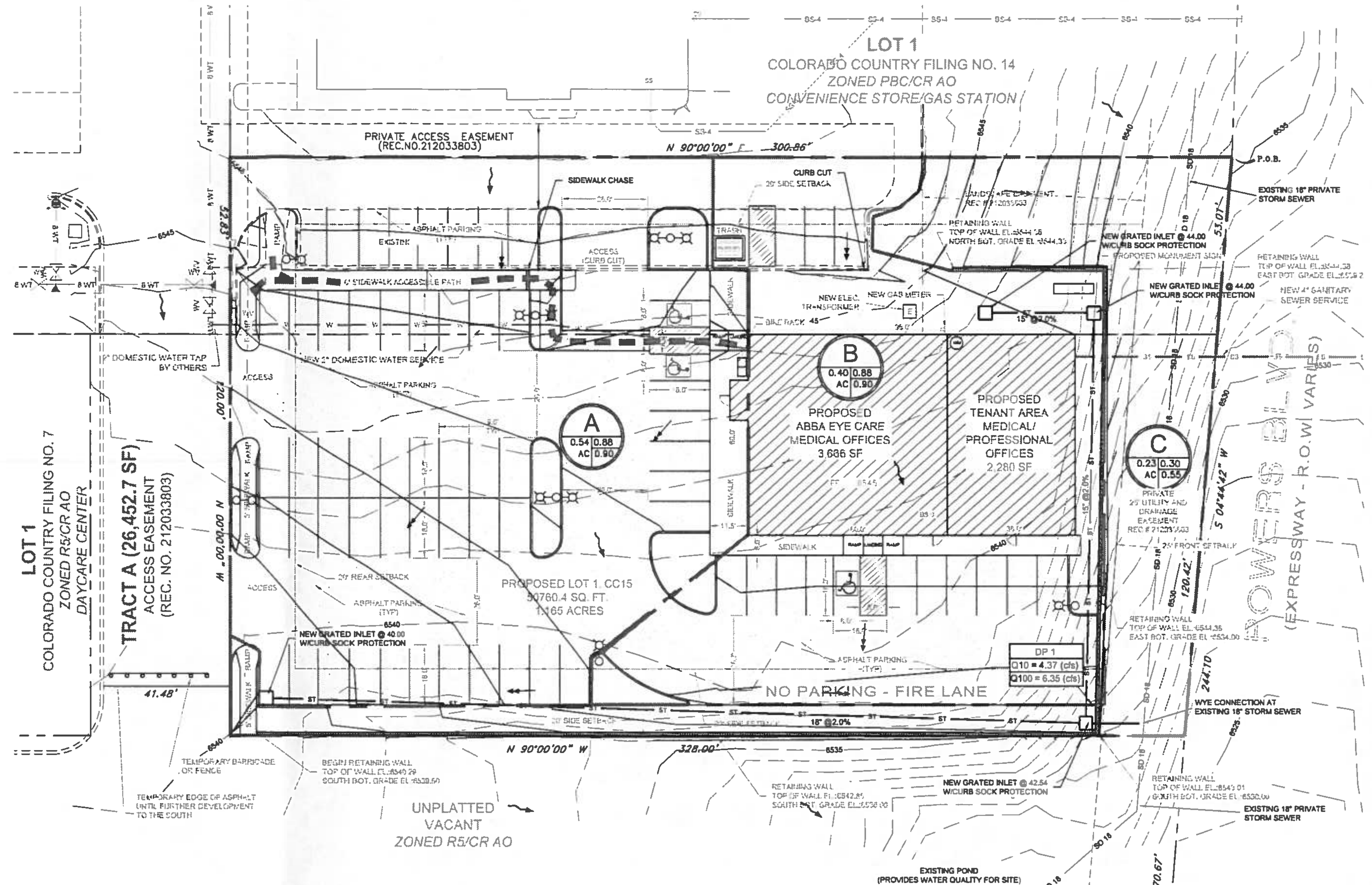

LEGEND

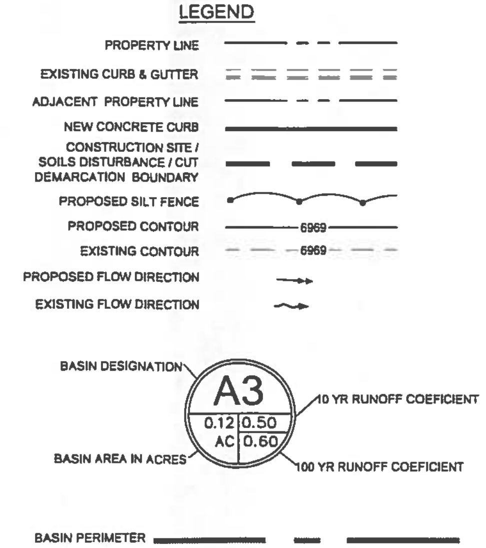

DESIGN FLOWS

DP OR BASIN
Q10 (cfs)
Q100 (cfs)

GRADING PLAN

0 20 40
SCALE : 1" = 20'

AR DP 16-00066

REVISIONS		
#	Date	Comment
-	-	-

Gagliano Engineering, Inc. - (719) 547-7073
MAIL: P.O. Box 2520, Pueblo, CO 81004
OFFICE: 1740 Eagleridge Blvd. Suite #150, Pueblo, CO 81008

ABBA EYE CARE
GRADING PLAN
ABBA_ADDRESS
ABBA_SUB, COLORADO SPRINGS CO 80901

	PROJECT NO.: 2016-006	
DRAWN BY: MG	DATE: 01/22/16	SCALE: as shown
		DRAWING NO.: 2016-006-basemap.dwg
CHECKED BY: MG	DATE: 06/16/16	SHEET NO.: C-2

FIGURE 4

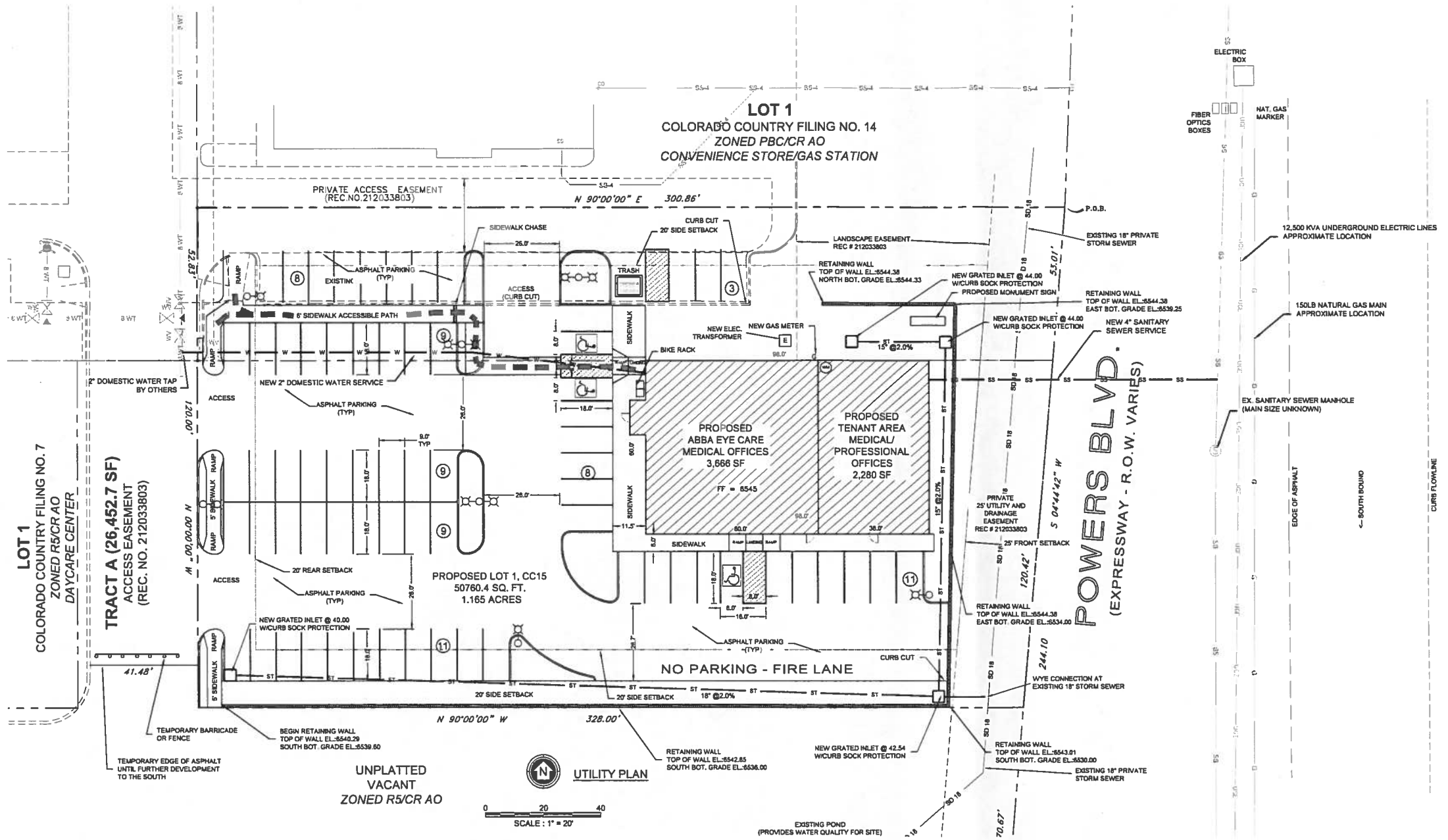

General Notes for all Preliminary Utility Plans

Property Owner(s) acknowledge and agree to the following upon approval of Preliminary Utility Plan:

1. This drawing is a Preliminary Utility Plan and therefore, Colorado Springs Utilities shall make the final determination of the location of all water, wastewater, electric, and gas facilities, which may not be the same location as shown on this Preliminary Utility Plan.
2. Property Owner(s) ("Owner") acknowledge that the connection and/or extension of utility services to the property identified in this Preliminary Utility Plan ("Property") shall be in accord with all applicable codes and regulations, Springs Utilities' Line Extension and Service Standards ("Standards"), tariffs, rules, regulations, and policies, City ordinances, resolutions, and policies, and Pikes Peak Regional Building Department codes, in effect at the time of utility service connection and/or extension.
3. Owner acknowledges responsibility for the costs of extensions or utility system improvements that Springs Utilities determines necessary to provide utility services to the Property or to ensure timely development of integrated utility systems serving the Property and areas outside the Property (including the costs to design and install all potable and non-potable water system facilities and appurtenances, and all wastewater collection system facilities and appurtenances, and any water or wastewater service lines to and within the Property). Owner may be eligible for a cost Recovery Agreement as provided in Utilities' Rules and Regulations.
4. Springs Utilities' utility services are available on a "first-come, first-served" basis, and therefore no specific allocations or amounts of utility services, facilities, capacities or supplies are reserved for the Owner, and Springs Utilities makes no commitment as to the availability of any utility service until such time as permanent service is initiated.
5. Only with the prior written approval by Springs Utilities, Owner may cause the relocation or alteration of any existing utility facilities within the Property at the Owner's sole cost and expense. If Springs Utilities determines that Owner's relocation or alteration requires new or updated easements, Owner shall convey those easements prior to relocating or altering the existing utility facilities.
6. Owner, at its sole cost and expense, shall dedicate by plat and/or convey by recorded document, all property and easements that Springs Utilities determines are required for all utility system facilities necessary to serve the Property or to ensure development of an integrated utility system. All easements granted by separate instrument shall utilize Springs Utilities' then-current Permanent Easement Agreement form (or Executive Agreement form) without modification unless approved by Springs Utilities.
7. The water distribution system facilities must meet Springs Utilities' criteria for water quality, reliability and pressure, including looping requirements (see Section 4.08 of Springs Utilities' Water Standards).
8. Owner recognizes that the extension of water system facilities may affect the quality of water in Springs Utilities' water system. When water quality is affected, Owner acknowledge responsibility for any costs that Springs Utilities determines necessary to incur in order to maintain water quality in its system as a result of Owner' water system extensions. (Water-quality Maintenance Costs). Owner shall reimburse Springs Utilities for such Water- quality Maintenance Costs within thirty (30) days of receipt of an invoice for such costs.
9. Owner must contact Springs Utilities Field Engineering to secure approval of gas-service-line pressures in excess of Springs Utilities' standard gas-system pressure, and the location of all meters and transformers. (Contact North Work Center 668-4985 or South Work Center 668-5564).
10. It shall not be permissible for any person to modify the grade of the earth on any Springs Utilities easement or rights of way without the written approval of Springs Utilities (City Code 12.2.540).
11. Springs Utilities' approval of this Preliminary Utility Plan shall not be construed as a limitation upon the authority of Springs Utilities to apply its Standards: and if there are any conflicts between any approved drawings and any provision of Standards or the City Code, then the Standards shall apply. Springs Utilities' approval of this Preliminary Utility Plan shall not be construed as a limitation upon the authority of the City or the Springs Utilities to adopt different ordinances, rules, regulations, resolutions, policies or codes which change any of the provisions of the Standards so long as these apply to the City generally and are in accord with the then-current tariffs, rates, rules, regulations and policies of Springs Utilities.

LEGEND

- PROPERTY LINE
- EXISTING CURB & GUTTER
- ADJACENT PROPERTY LINE
- NEW CONCRETE CURB
- EXISTING WATERLINE — W —
- EXISTING SANITARY SEWER LINE — SS —
- EXISTING STORM SEWER LINE — ST —
- PROPOSED SANITARY SEWER LINE — SS —
- PROPOSED WATER LINE — W —

GENERAL UTILITY NOTES:

1. All materials, methods of construction, preparation, mixing, placement, finishing and testing shall conform to applicable sections of the City of Colorado Springs Utilities "Standard Construction Specifications and Standard Details". Latest edition in effect on the date of the invitation for Bids, unless stated otherwise in the plans specification.
2. Cuts in asphalt shall be clean, straight, vertical and shall be accomplished by saw cutting, use of a cutting wheel, or other method as approved by the City of Colorado Springs Utilities
3. The contractor shall be responsible for the disposal of all waste material including base, dirt, concrete, pavement, etc.
4. The location of existing underground utilities are shown approximately and may not include all utilities. The excavation contractor shall determine the exact location of ALL existing utilities before commencing work. The contractor agrees to be fully responsible for any and all damages which might be occasioned by his failure to exactly locate and preserve any and all underground utilities. Utility Notification Center of Colorado 1-800-922-1987.
5. Contractor will provide a minimum of seven (7) days notice to the appropriate governing agency prior to commencing work.
6. Water Mains and appurtenances shall be installed in accordance with Colorado Springs Utilities
7. The contractor shall adjust Water Valve Boxes as necessary and Sanitary Sewer Manhole rims using concrete grade rings.
8. Dimensions are to face of curb unless otherwise specified.
9. Elevations shown are finished grade unless otherwise specified.
10. Cleanouts to be installed per current Plumbing Code as enforced by Colorado Springs Utilities.
11. All Sanitary Sewer services and Fire Lines to be stubbed to within 5.00 feet of the building.
12. Contractor shall coordinate the service line construction for the following utilities with the agencies listed below:

SANITARY SEWER:

1. Contractor shall insure a minimum of 10' separation between water and sanitary sewer lines is maintained.
2. The Contractor shall uncover the location of connections prior to beginning installation, to insure conformance with sizes, lines and grades shown on the plans. Any discrepancies shall be brought to the attention of the City Engineer, The Regional Building Department and the Engineer of Record as well, prior to proceeding.
3. Sewer main connections made by the Contractor shall conform to the standard construction specifications and standard details for the City of Colorado Springs Utilities current edition
4. All sewer mains shall have a minimum of four (4) feet of cover the top of the pipe, unless stated otherwise in the plans.
5. All sanitary sewer/watermain crossings shall comply with the applicable State Health department separation and material requirements.
6. All work done without jurisdictional inspections shall be subject to removal and reinstallation at the Contractor's expense.
7. All proposed manholes require Pamrex Lock Down Rings and Covers, unless otherwise authorized by City of Colorado Springs Utilities.
8. All proposed manholes are to be epoxy coated as required by City of Colorado Springs Utilities

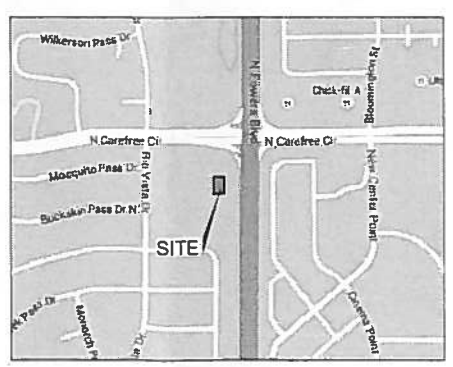

VICINITY MAP
N.T.S.

OTHER UTILITIES:
Colorado Springs Utilities
121 S TEJON BLVD Suite # 200
COLORADO SPRINGS, CO 80903-2187
(719) 448-4800

CABLE T.V./DATA:
Comcast
213 N. UNION BLVD.
COLORADO SPRINGS, CO 80909
Vickey De Jesus 719-442-4737

FIGURE 4

AR DP 16-00066

REVISIONS		
#	Date	Comment
--	--	--

Gagliano Engineering, Inc. - (719) 547-7073
LAND: P.O. Box 2520, Pueblo, CO 81004
OFFICE: 1740 Eagleridge Blvd. Suite #150, Pueblo, CO 81008

ABBA EYE CARE
UTILITY & PUBLIC IMPROVEMENT PLAN
ABBA_ADDRESS
ABBA_SUB, COLORADO SPRINGS CO 80901

	PROJECT NO.: 2016-006	
DRAWN BY: MG	DATE: 01/22/16	SCALE: as shown
		DRAWING NO.: 2016-006-basemap.dwg
CHECKED BY: MG	DATE: 06/16/16	SHEET NO.: C-3

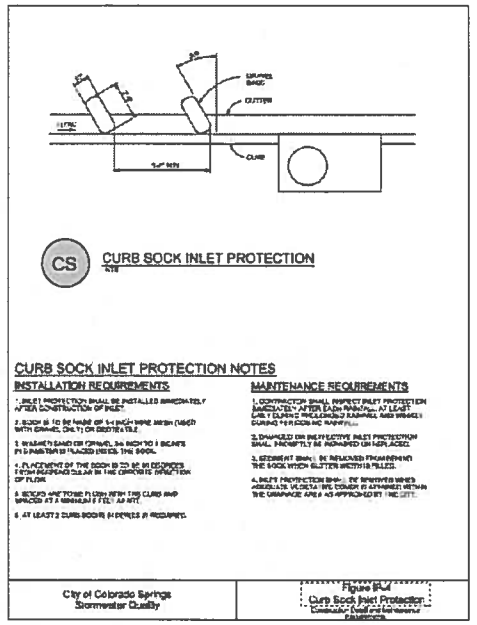

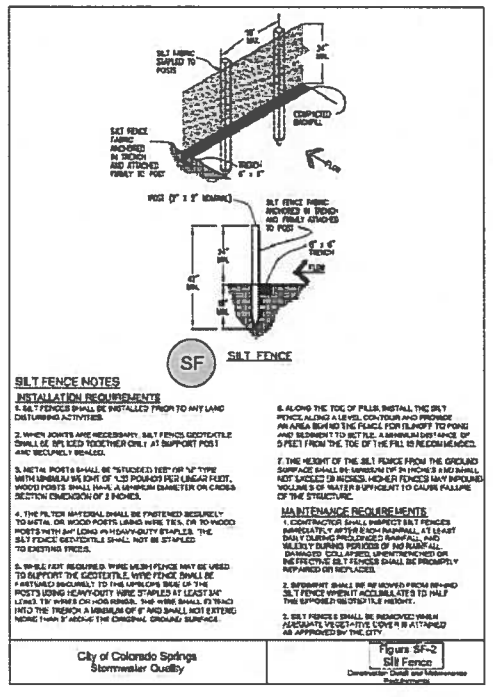

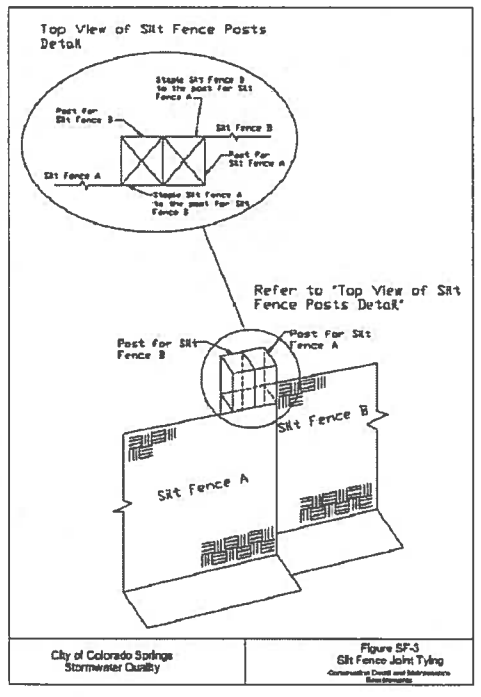

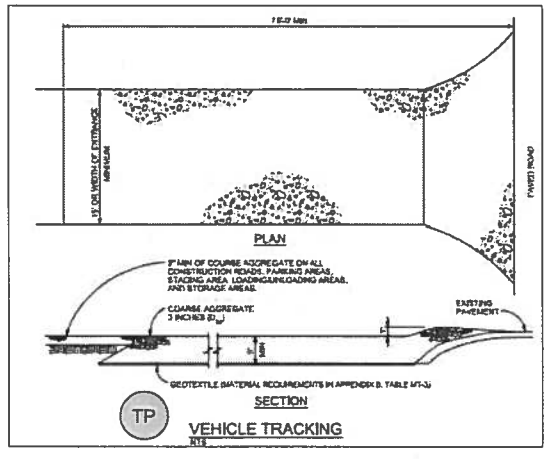

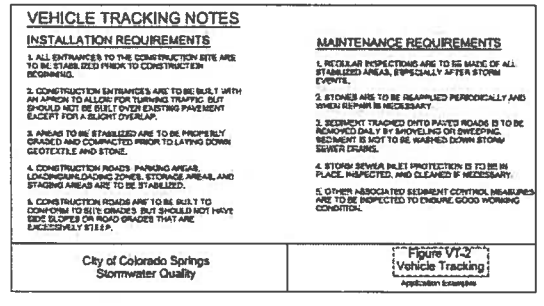

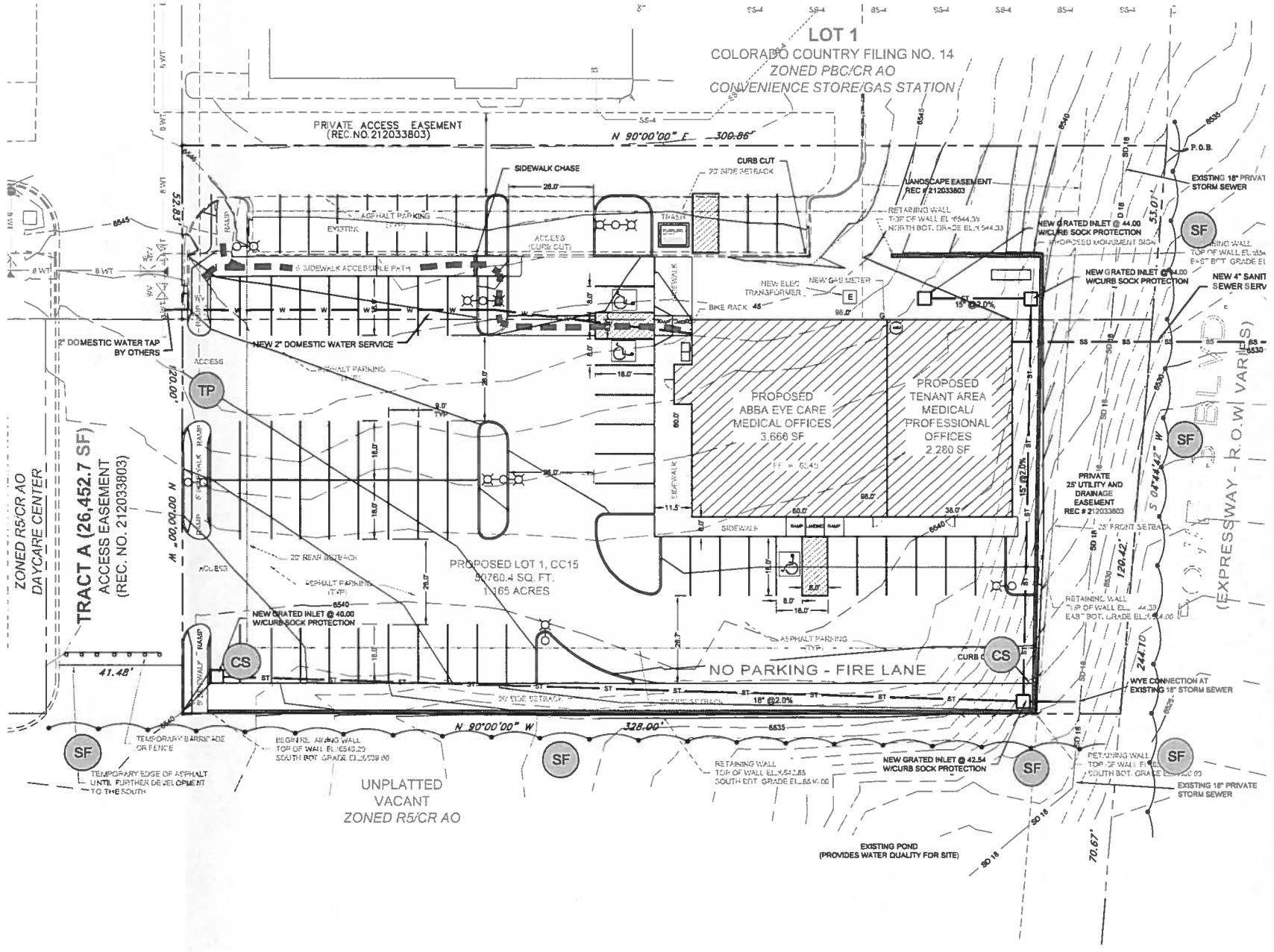

EROSION CONTROL PLAN

0 20 40

SCALE : 1" = 20'

LEGEND

- PROPERTY LINE
- EXISTING CURB & GUTTER
- ADJACENT PROPERTY LINE
- NEW CONCRETE CURB
- CONSTRUCTION SITE / SOILS DISTURBANCE / CUT DEMARCATION BOUNDARY
- PROPOSED SILT FENCE
- PROPOSED CONTOUR 6969
- EXISTING CONTOUR 6969
- PROPOSED FLOW DIRECTION
- EXISTING FLOW DIRECTION

AR DP 16-00066

REVISIONS		
#	Date	Comment
-	-	-

Gagliano Engineering, Inc. - (719) 547-7073
MAIL: P.O. Box 2520, Pueblo, CO 81004
OFFICE: 1740 Eagleridge Blvd. Suite #150, Pueblo, CO 81008

ABBA EYE CARE

EROSION CONTROL PLAN

ABBA_ADDRESS

ABBA_SUB, COLORADO SPRINGS CO 80901

	PROJECT NO.: 2016-006	
DRAWN BY: MG	DATE: 01/22/16	SCALE: as shown
		DRAWING NO.: 2016-006-basemap.dwg
CHECKED BY: MG	DATE: 06/16/16	SHEET NO.: C-4

FIGURE 4

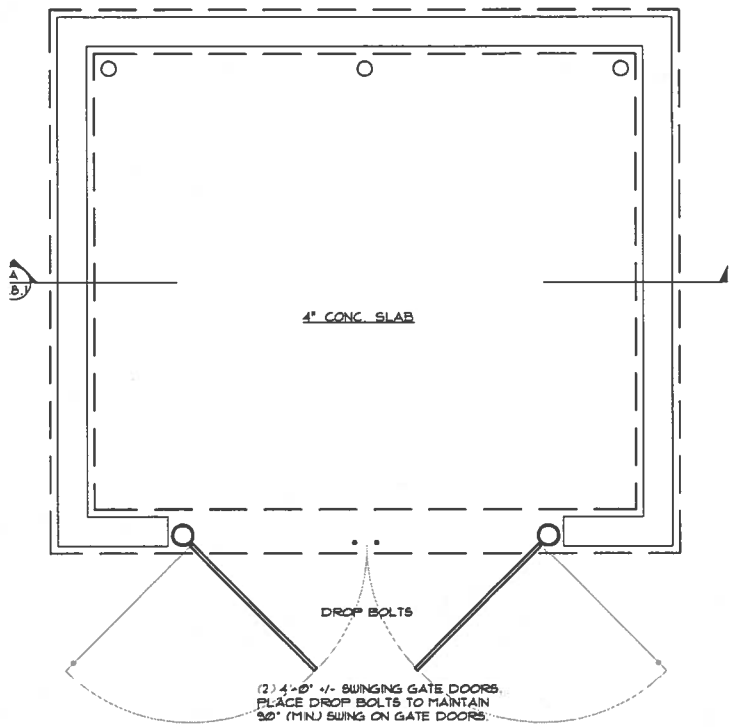

1 TRASH ENCLOSURE
SCALE: 1/2" = 1'-0"

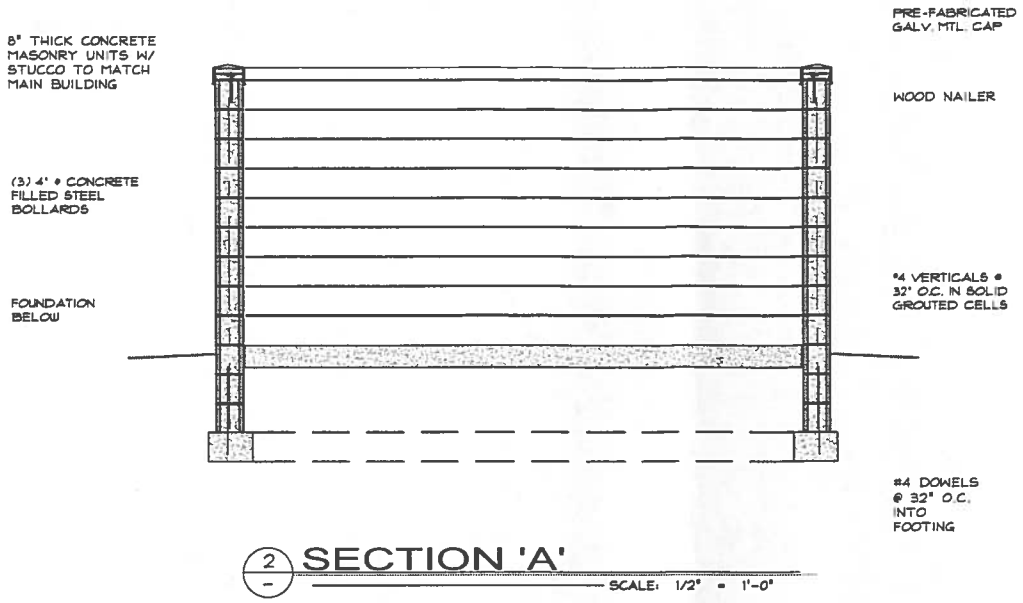

2 SECTION 'A'
SCALE: 1/2" = 1'-0"

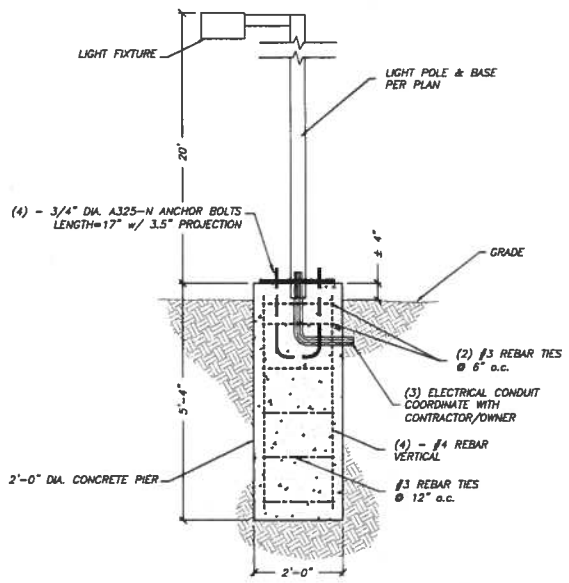

LIGHT POLE FOUNDATION - SECTION VIEW
SCALE - 1/2" = 1'-0"

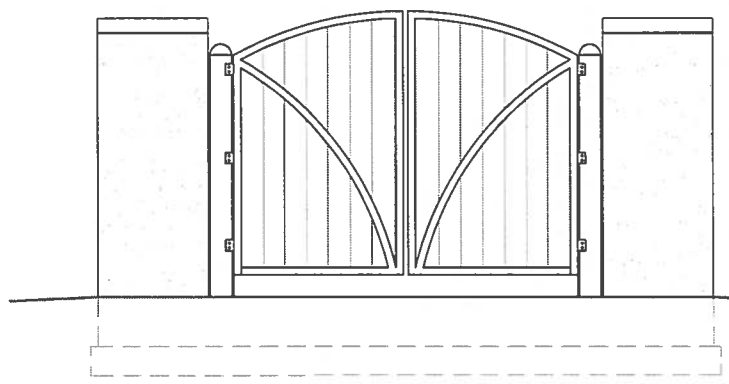

3 FRONT ELEVATION
SCALE: 1/2" = 1'-0"

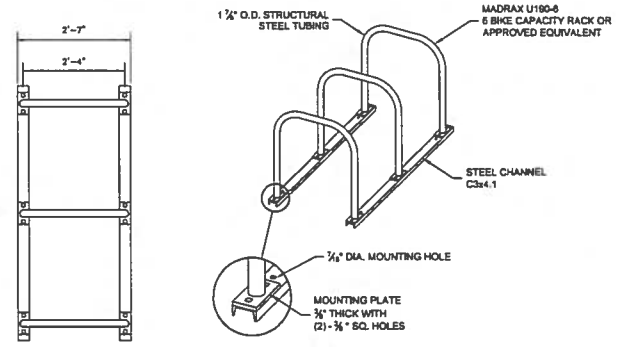

NOTES:
1. INSTALL BIKE RACKS ACCORDING TO MANUFACTURER'S SPECIFICATIONS.
2. OWNER TO SELECT COLOR(FINISH). SEE MANUFACTURER'S SPECIFICATIONS.
3. SEE SITE PLAN FOR LOCATION.

BIKE RACK
(NOT TO SCALE)

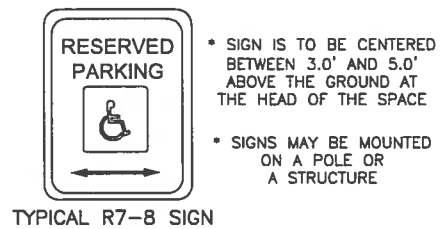

TYPICAL R7-8 SIGN
(NOT TO SCALE)

TYPICAL R7-8a SIGN
(NOT TO SCALE)

- SIGN IS TO BE CENTERED BETWEEN 3.0' AND 5.0' ABOVE THE GROUND AT THE HEAD OF THE SPACE
- SIGNS MAY BE MOUNTED ON A POLE OR A STRUCTURE

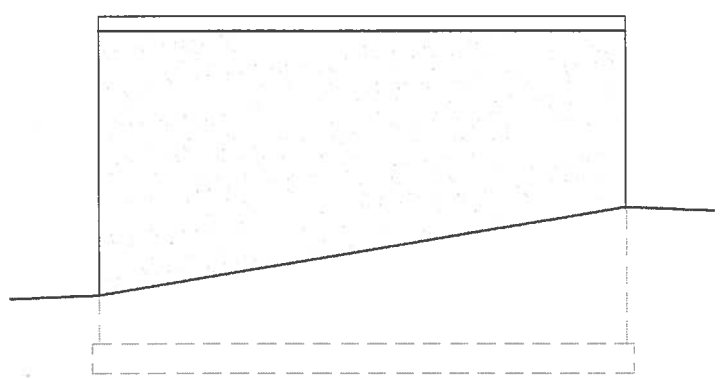

4 SIDE ELEVATION
SCALE: 1/2" = 1'-0"

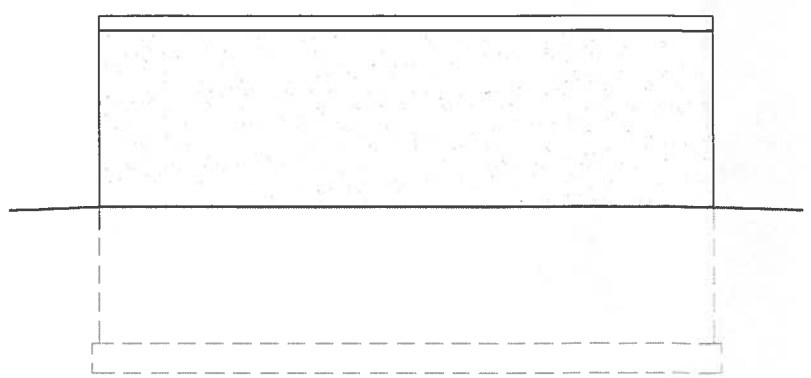

5 REAR ELEVATION
SCALE: 1/2" = 1'-0"

AR DP 16-00066

REVISIONS		
#	Date	Comment
-	-	-

Gagliano Engineering, Inc. - (719) 547-7073
MAIL: P.O. Box 2520, Pueblo, CO 81004
OFFICE: 1740 Eagleridge Blvd. Suite #150, Pueblo, CO 81008

ABBA EYE CARE
COVER SHEET & SITE PLAN
ABBA_ADDRESS
ABBA_SUB, COLORADO SPRINGS CO 80901

	PROJECT NO.: 2016-006	
DRAWN BY: MG	DATE: 01/22/16	SCALE: as shown
		DRAWING NO.: 2016-006-basemap.dwg
CHECKED BY: MG	DATE: 06/16/16	SHEET NO.: C-5

FIGURE 4

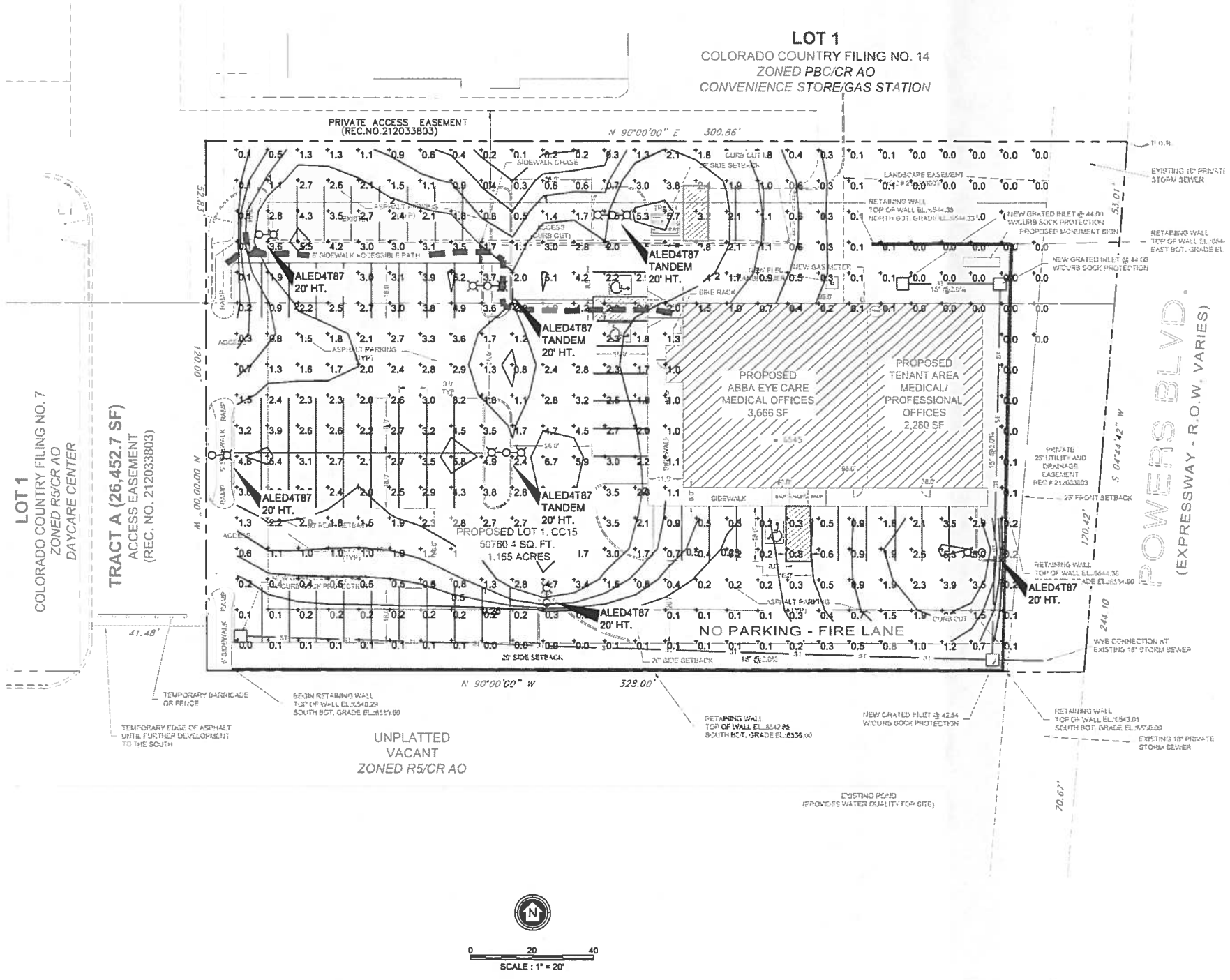

FIGURE 4

ALED4T78

RAB LIGHTING

Specification Grade Area lights available in IES Type IV distributions. For use in parking lots, roadways, pathways and general area lighting. Mounts to 4" square steel poles at 15-25' Designed to replace 250W Metal Halide Area Lights. Patent Pending thermal management system. 5 Year Warranty.

Color: Bronze

Weight: 31 Lbs

Project:	Type:
Prepared By:	Date:

Driver Info

Type:	Constant Current
120V	0.66A
208V	0.41A
240V	0.35A
277V	0.30A
Input Watts	79W
Efficiency:	90%

LED Info

Watts	79W
Color Temp:	5100K (Cool)
Color Accuracy:	67 CRI
L70 / lifespan:	100,000
Lumens:	7,304
Efficacy:	93 LPW

Technical Specifications

Listings

UL Listing:
Suitable for wet locations as a standard

IESNA LM-79 & IESNA LM-80 Testing:
RAB LED luminaires have been tested by an independent laboratory, in accordance with IESNA LM-79 and 80, and have received the Department of Energy "Lighting Facts" label.

Dark Sky Approved:
The International Dark Sky Association has approved this product as a full cutoff, fully shielded luminaire

DLC Listed:
This product is on the Design Lights Consortium (DLC) Qualified Products List and is eligible for rebates from DLC Member Utilities
DLC Product Code: P600011RK

Optical

Lumen Maintenance:
100,000-hour LED lifespan based on IES LM-80 results and TM-21 calculations.

Replacement:
The ALED4T replaces 250W Metal Halide Area Lights

BUG Rating:
B1 U5 G2

Construction

IES Classification:
The Type IV distribution (also known as a Forward Throw) is especially suited for mounting on the sides of buildings and walls, and for illuminating the perimeter of parking areas. It produces a semi-circular distribution with essentially the same candlepower at lateral angles from 90° to 270°.

Effective Projected Area:
EPA = 0.75

Ambient Temperature:
Suitable for use in 40°C ambient temperatures

Cold Weather Starting:
The minimum starting temperature is -40°F/-40°C.

Thermal Management:
Superior heat sinking with external fin-fin fins.

Housing:
Die cast aluminum housing, wire frame and mounting arm.

IP Rating:
Ingress Protection rating of IP66 for dust and water.

Reflector:
Specular vacuum-metallized polycarbonate

Gaskets:
High temperature silicone gaskets.

Finish:
Our environmentally friendly polyester powder coatings are formulated for high-durability and long-lasting color, and contains no VOC or toxic heavy metals.

Green Technology:
Mercury and UV free

For use on LEED Buildings:
IDA Dark Sky Approval means that the fixture can be used to achieve LEED Credits for Light Pollution Reduction

LED Characteristics

LEDs:
Six (6) multi-chip, 12W, high-output, long-life LEDs

Color Consistency:
3-step MacAdam Ellipse binning to achieve consistent fixture-to-fixture color

Color Stability:
LED color temperature is warrantied to shift no more than 200K in CCT over a 5 year period

Color Uniformity:
ANSI's range of CCT (Correlated color temperature) follows the guidelines of the American National Standard for Specifications for the Chromaticity of Solid State Lighting (SSL) Products ANSI C78.377-2015

Electrical

Driver:
Constant Current, Class 2, 2000mA, 100-277V, 50-60Hz, 1.1A, Power Factor 98%

THD:
5.1% at 120V, 13.2% at 277V

Surge Protection:
4kV

Need help? Technical line: RAB MAS-1000 Email: sales@rabweb.com We color: www.rabweb.com

Copyright © 2014 RAB Lighting Inc. All Rights Reserved. Note: Specifications are subject to change at any time without notice.

Page 1 of 2

AR DP 16-00066

REVISIONS		
#	Date	Comment
–	–	–

Gagliano Engineering, Inc. - (719) 547-7073
LAND: P.O. Box 2520, Pueblo, CO 81004
OFFICE: 1740 Eagleridge Blvd. Suite #150, Pueblo, CO 81008

ABBA EYE CARE
PHOTOMETRIC PLAN
ABBA_ADDRESS
ABBA_SUB, COLORADO SPRINGS CO 80901

	PROJECT NO.: 2016-006	
DRAWN BY: jvg	DATE: 01/22/16	SCALE: as shown
		DRAWING NO.: 2016-006-basemap.dwg
CHECKED BY: jvg	DATE: 06/16/16	SHEET NO.: C-6

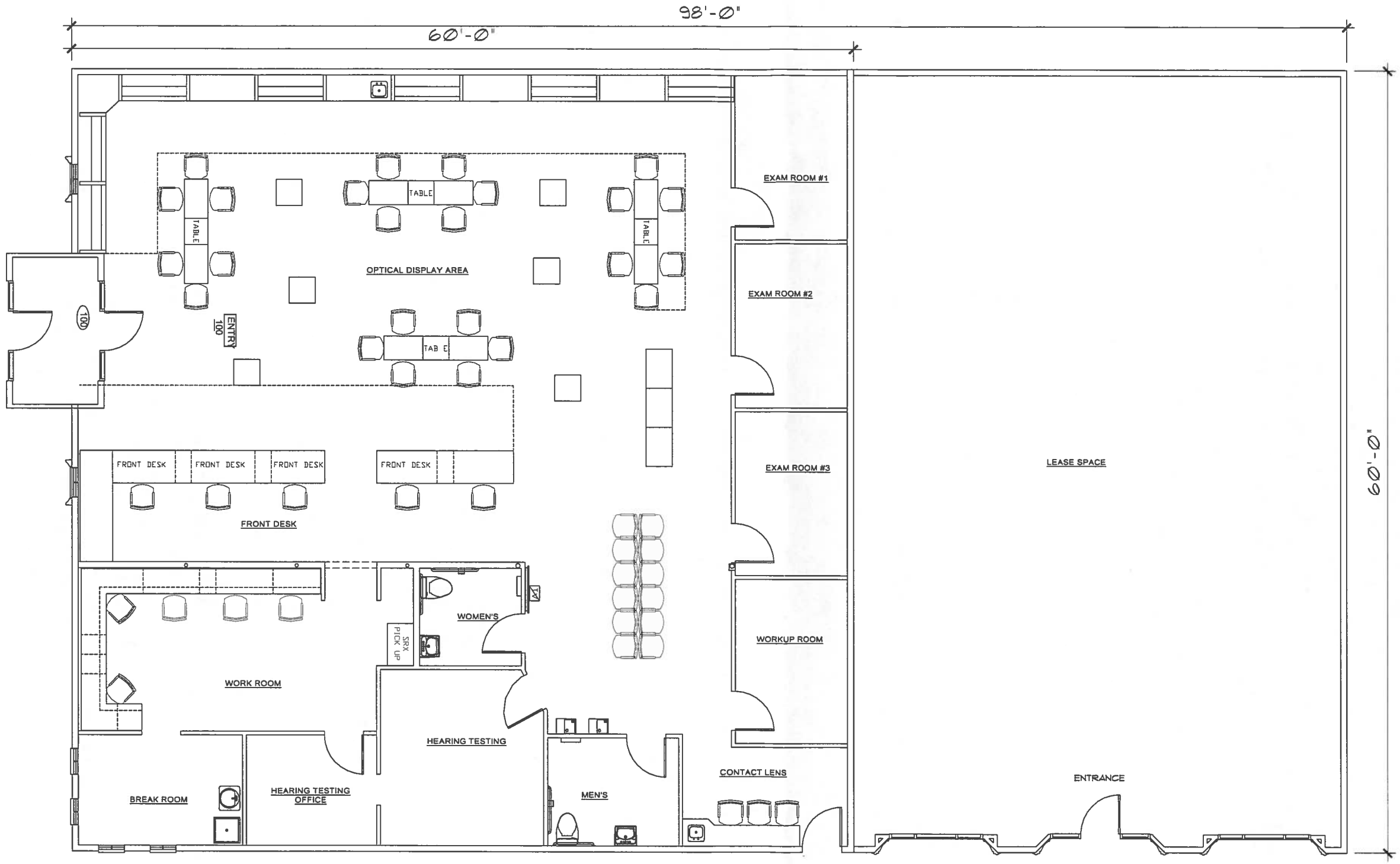

FLOOR PLAN
SCALE: 1/4" = 1'-0"

FIGURE 4

AR DP 16-00066

Gagliano Engineering, Inc. - (719) 547-7073
MAIL: P.O. Box 2520, Pueblo, CO 81004
OFFICE: 1740 Eagleridge Blvd. Suite #150, Pueblo, CO 81008

ABBA EYE CARE
DP FLOOR PLAN
ABBA_ADDRESS
ABBA_SUB, COLORADO SPRINGS CO 80901

REVISIONS		
#	Date	Comment
--	--	--

	PROJECT NO.: 2016-006	
DRAWN BY: jvg	DATE: 01/22/16	SCALE: as shown
		DRAWING NO.: 2016-006-basemap.dwg
CHECKED BY: jvg	DATE: 06/16/16	SHEET NO.: DP-A-1

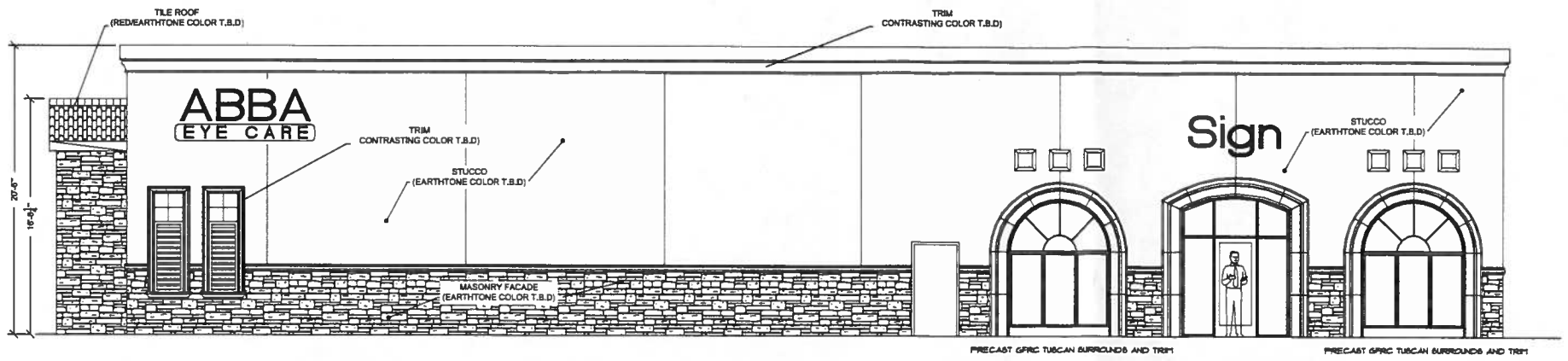

RIGHT (SOUTH) ELEVATION

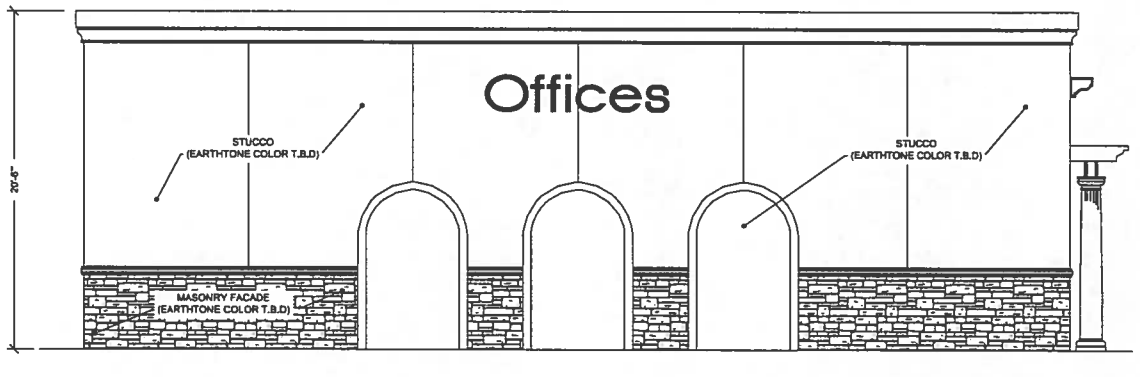

REAR (EAST) ELEVATION

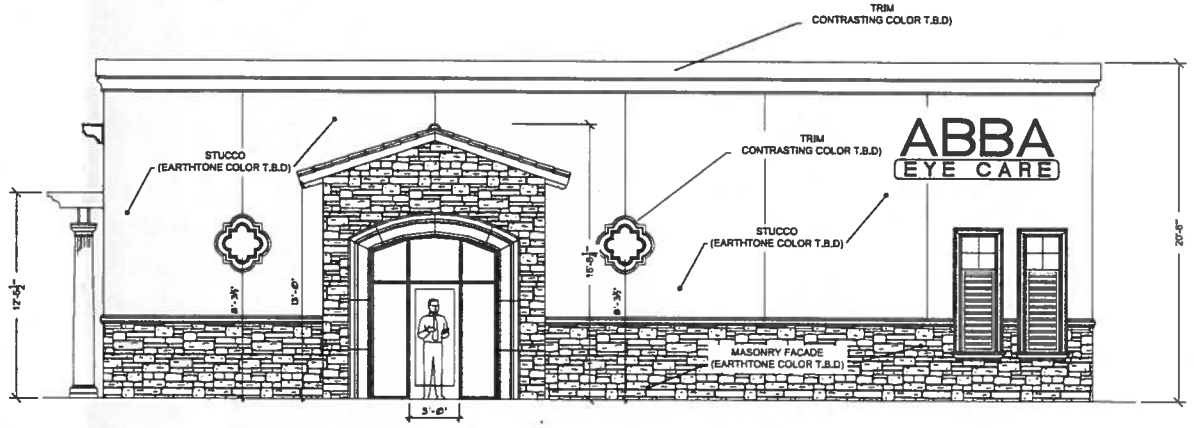

FRONT (WEST) ELEVATION

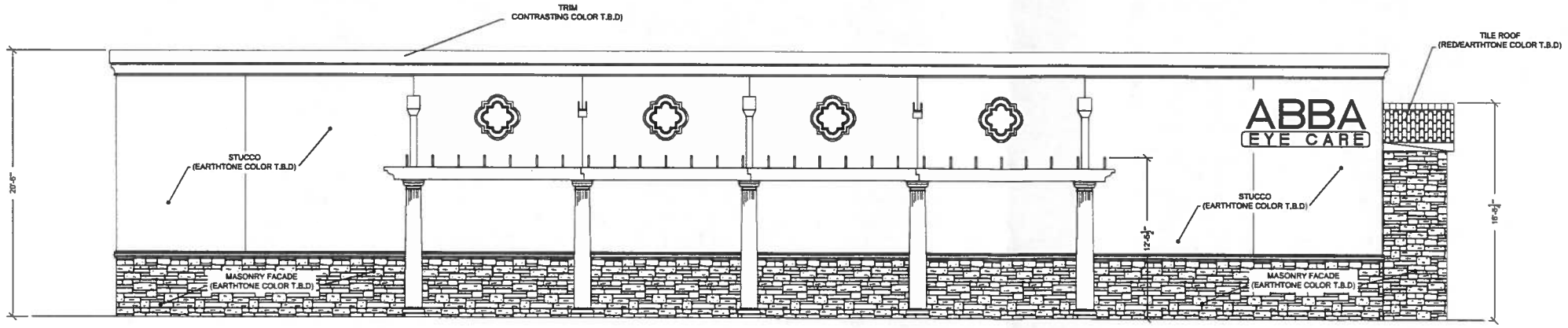

LEFT (NORTH) ELEVATION

SCALE: 3/16" = 1'-0"

FIGURE 4

AR DP 16-00066

Gagliano Engineering, Inc. - (719) 547-7073
MAIL P.O. Box 2520 Pueblo, CO 81004
OFFICE 1740 Eagleridge Blvd. Suite #150 Pueblo, CO 81008

ABBA EYE CARE
DP ELEVATIONS
ABBA_ADDRESS
ABBA_SUB, COLORADO SPRINGS CO 80901

REVISIONS		
#	Date	Comment
-	-	-

PROJECT NO.: 2016-006
DRAWN BY: jvg | DATE: 01/22/16 | SCALE: as shown
DRAWING NO.: 2016-006-basemap.dwg
CHECKED BY: jvg | DATE: 06/16/16 | SHEET NO.: DP-A-2