T··Mobile·

SITE NAME:
SW SPRINGS

SITE NUMBER:
DN04163B

LOCATION:
2520 ARLINGTON DR. COLORADO SPRINGS, CO 80910

60'-0" BELL TOWER
CONSTRUCTION DRAWINGS

SITE INFORMATION

TOWER OWNER:	T-MOBILE WEST LLC 2323 DELGANY ST. DENVER, CO 80216
SITE ADDRESS:	2520 ARLINGTON DR. COLORADO SPRINGS, CO 80910
COUNTY:	EL PASO
LATITUDE: LONGITUDE:	38.808950 N 104.777981 W
GROUND ELEVATION:	6029' AMSL
OCCUPANCY TYPE:	UNMANNED
ZONING JURISDICTION:	CITY OF COLORADO SPRINGS
ZONING:	R-1 6000/CU
PARCEL NUMBER:	6428103028
POWER PROVIDER:	TBD
TELCO PROVIDER:	TBD

CONTACT INFORMATION

ENGINEERING:
POWDER RIVER DEVELOPMENT SERVICES, LLC.
219 S. WOODDALE AVE.
EAGLE, ID 83616
CONTACT: DON GEORGE, PE, SE, MLSE
PHONE: (208) 602-6469
EMAIL: don.george@powderriverdev.com

APPLICANT:
T-MOBILE WEST LLC
2323 DELGANY STREET
DENVER, CO 80216
CONTACT: DENISE FULLER
PHONE: (303) 257-0659
EMAIL: denise.fuller18@t-mobile.com

VICINITY MAP

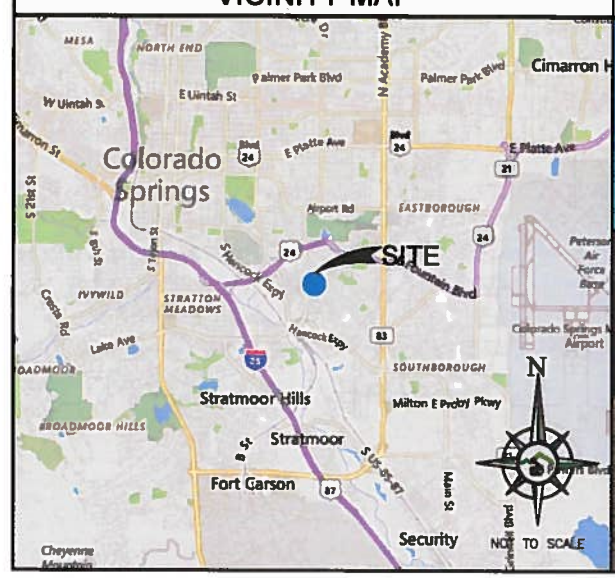

SITE PHOTO

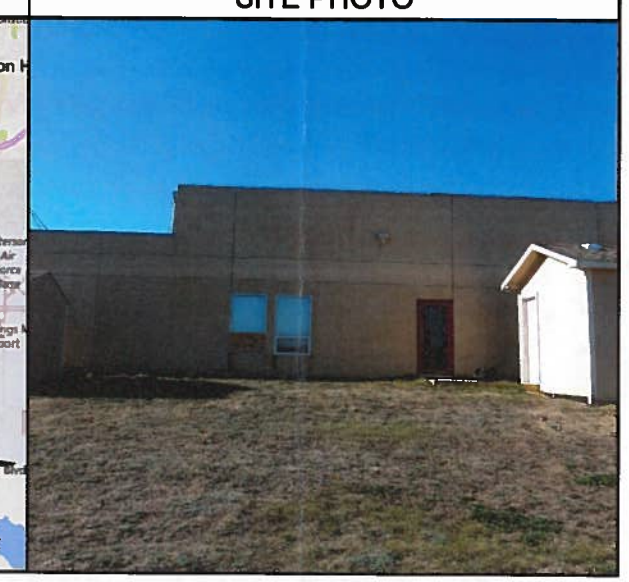

DRIVING DIRECTIONS

FROM T-MOBILE OFFICE (2323 DELGANY ST., DENVER, CO 80216):

DEPART DELGANY ST & TURN RIGHT ONTO PARK AVE W. BEAR RIGHT ONTO FOX ST. TAKE RAMP FOR I-25 S/US-87 S. TAKE RAMP RIGHT & TURN LEFT ONTO S CIRCLE DR/LAKE AVE. TURN RIGHT ONTO ARLINGTON DR. TURN LEFT INTO CHURCH PARKING LOT IMMEDIATELY AFTER RAINIER DR. SITE WILL BE LOCATED IN THE EMPTY FIELD TO THE NORTHWEST OF THE CHURCH.

LEGAL DESCRIPTION

LOT 2 IN CATALINA SUBDIVISION, A REPLAT OF LOTS 12 AND 13, BLOCK 1 STRATMOOR HILLS ADDITION NO.4 AS RECORDED IN BOOK S-3 AT PAGE 40 IN THE RECORDS OF EL PASO COUNTY, COLORADO. AND BEING THE SAME PROPERTY CONVEYED TO THE STRATMOOR HILLS WATER DISTRICT FROM THE CRESTMARK CORPORATION, A COLORADO CORPORATION BY WARRANTY DEED DATED JANUARY 10, 1983 AND RECORDED JANUARY 10, 1983 IN DEED BOOK 3658, PAGE 684.

DO NOT SCALE DRAWINGS

CONTRACTOR SHALL VERIFY ALL PLANS & EXISTING DIMENSIONS & CONDITIONS ON THE JOB SITE & SHALL IMMEDIATELY NOTIFY THE ENGINEER IN WRITING OF ANY DISCREPANCIES BEFORE PROCEEDING WITH THE WORK OR BE RESPONSIBLE FOR SAME

DRAWING INDEX

SCOPE OF WORK

INSTALL (1) 12'-0"x10'-0" CONCRETE EQUIPMENT PAD W/ ASSOCIATED EQUIPMENT & (1) 60'-0" BELL TOWER W/ (9) 8' ANTENNAS, (3) FRIG UNITS, (3) FRLB UNITS, (2) FXFC UNITS, (1) COVP UNIT & (1) HYBRID CABLE, ALL WITHIN A NEW 20'-0"x50'-0" COMPOUND SURROUNDED BY AN 8' CMU WALL.

APPLICABLE CODES

BUILDING CODE 2012 IBC
ELECTRICAL CODE 2014 NEC

T··Mobile·

T-MOBILE WEST, LLC
2323 DELGANY STREET
DENVER, CO 80216

POWDER RIVER
Engineering Services, LLC
www.powderriverdev.com

LICENSE #: N/A

REVISIONS

REV	DATE	DESCRIPTION	INT
B	06/13/16	ISSUED FOR REVIEW 90%	JE
A	05/10/16	ISSUED FOR REVIEW 90%	JE

SITE INFORMATION

DN04163B
SW SPRINGS

2520 ARLINGTON DR.
COLORADO SPRINGS, CO
80910

SHEET TITLE:

TITLE SHEET

SHEET NUMBER:

T-1

CPC CM1 16-00070

FIGURE 1

GENERAL NOTES

1. THE CONTRACTOR'S SCOPE OF WORK SHALL INCLUDE ALL ITEMS DEFINED IN THE CONTRACT DOCUMENTS. THE CONTRACT DOCUMENTS INCLUDE, BUT ARE NOT LIMITED TO, THE FOLLOWING: THE CONTRACT, SPECIFICATIONS AND CONSTRUCTION DRAWINGS.
2. ALL EQUIPMENT SUPPLIED BY THE OWNER SHALL BE PICKED UP BY THE CONTRACTOR AT THE APPROPRIATE WAREHOUSE.
3. THE CONTRACTOR IS RESPONSIBLE FOR COORDINATING ALL WORK.
4. THE CONTRACTOR SHALL PROVIDE ON-SITE SUPERVISION AT ALL TIMES WHILE THE WORK IS BEING PERFORMED AND SHALL DIRECT ALL WORK, USING HIS BEST SKILL AND ATTENTION. HE SHALL BE SOLELY RESPONSIBLE FOR ALL CONSTRUCTION MEANS, METHODS, TECHNIQUES, PROCEDURES AND SEQUENCES FOR COORDINATING ALL PORTIONS OF THE WORK UNDER THE CONTRACT.
5. THE CONTRACTOR SHALL VISIT THE JOB SITE TO REVIEW THE SCOPE OF WORK AND EXISTING JOB SITE CONDITIONS INCLUDING, BUT NOT LIMITED TO, MECHANICAL, ELECTRICAL SERVICE AND OVERALL COORDINATION. THE CONTRACTOR SHALL VERIFY ALL EXISTING CONDITIONS AND DIMENSIONS PRIOR TO SUBMITTING HIS BID. ANY DISCREPANCIES, CONFLICTS OR OMISSIONS, ETC., SHALL BE REPORTED TO T-MOBILE CONSTRUCTION SUPERVISOR BEFORE PROCEEDING WITH THE WORK.
6. THE CONTRACTOR SHALL PROTECT ALL AREAS FROM DAMAGE WHICH MAY OCCUR DURING CONSTRUCTION. ANY DAMAGE TO NEW AND EXISTING CONSTRUCTION, STRUCTURE, LANDSCAPING OR EQUIPMENT SHALL BE IMMEDIATELY REPAIRED OR REPLACED TO THE SATISFACTION OF THE TENANT, BUILDING OWNER OR OWNER'S REPRESENTATIVE AT THE EXPENSE OF THE CONTRACTOR.
7. IT SHALL BE THE RESPONSIBILITY OF THE CONTRACTOR TO LOCATE ALL EXISTING UTILITIES, WHETHER SHOWN HEREON OR NOT, AND TO PROTECT THEM FROM DAMAGE. THE CONTRACTOR SHALL BEAR ALL EXPENSES FOR REPAIR OR REPLACEMENT OF UTILITIES OR OTHER PROPERTY DAMAGED IN CONJUNCTION WITH THE EXECUTION OF WORK.
8. THE CONTRACTOR SHALL BE RESPONSIBLE FOR THE COMPLETE SECURITY OF THE SITE WHILE THE JOB IS IN PROGRESS AND UNTIL THE JOB IS COMPLETED.
9. THE CONTRACTOR SHALL PROVIDE TEMPORARY WATER, POWER AND TOILET FACILITIES AS REQUIRED BY THE CITY OR GOVERNING AGENCY.
10. THE CONTRACTOR AND ALL SUBORDINATE CONTRACTORS SHALL COMPLY WITH ALL LOCAL AND STATE REGULATIONS.
11. THE CONTRACTOR SHALL OBTAIN AND PAY FOR PERMITS, LICENSES AND INSPECTIONS NECESSARY FOR PERFORMANCE OF THE WORK AND INCLUDE THOSE IN THE COST OF THE WORK TO T-MOBILE.
12. FIGURED DIMENSIONS HAVE PRECEDENCE OVER DRAWING SCALE, AND DETAIL DRAWINGS HAVE PRECEDENCE OVER SMALL DRAWINGS. CHECK ACCURACY OF ALL DIMENSIONS IN THE FIELD. UNLESS SPECIFICALLY NOTED, DO NOT FABRICATE ANY MATERIALS OFF SITE, NOR DO ANY CONSTRUCTION UNTIL THE ACCURACY OF DRAWING DIMENSIONS HAVE BEEN VERIFIED AGAINST ACTUAL FIELD DIMENSIONS.
13. THE CONTRACTOR SHALL NOTIFY THE T-MOBILE CONSTRUCTION SUPERVISOR OF ANY CONFLICTS OR DISCREPANCIES IN THE CONTRACT DOCUMENTS OR FIELD CONDITIONS PRIOR TO EXECUTING THE WORK IN QUESTION.
14. THE CONTRACTOR SHALL NOTIFY THE T-MOBILE CONSTRUCTION SUPERVISOR IF DETAILS ARE CONSIDERED UNSOUND, UNSAFE, NOT WATERPROOF, OR NOT WITHIN CUSTOMARY TRADE PRACTICE. IF WORK IS PERFORMED, IT WILL BE ASSUMED THAT THERE IS NO OBJECTION TO THE DETAIL. DETAILS ARE INTENDED TO SHOW THE END RESULT OF THE DESIGN. MINOR MODIFICATIONS MAY BE REQUIRED TO SUIT JOB CONDITIONS, AND SHALL BE INCLUDED AS PART OF THE WORK.
15. EXISTING ELEVATIONS AND LOCATIONS TO BE JOINED SHALL BE VERIFIED BY THE CONTRACTOR BEFORE CONSTRUCTION. IF THEY DIFFER FROM THOSE SHOWN ON THE PLANS, THE CONTRACTOR SHALL NOTIFY THE T-MOBILE CONSTRUCTION SUPERVISOR SO THAT MODIFICATIONS CAN BE MADE BEFORE PROCEEDING WITH THE WORK.
16. ALL SYMBOLS AND ABBREVIATIONS USED ON THE DRAWINGS ARE CONSIDERED CONSTRUCTION STANDARDS. IF THE CONTRACTOR HAS QUESTIONS REGARDING THEIR EXACT MEANING, THE T-MOBILE CONSTRUCTION SUPERVISOR SHALL BE NOTIFIED FOR CLARIFICATION BEFORE PROCEEDING WITH THE WORK.
17. THE CONTRACTOR SHALL PROVIDE ALL NECESSARY BLOCKING, BACKING, FRAMING, HANGERS OR OTHER SUPPORT FOR ALL OTHER ITEMS REQUIRING THE SAME.
18. CITY APPROVED PLANS SHALL BE KEPT IN A PLAN BOX AND SHALL NOT BE USED BY WORKMEN. ALL CONSTRUCTION SETS SHALL REFLECT SAME INFORMATION. AT ALL TIMES THESE ARE TO BE UNDER THE CARE OF THE JOB SUPERINTENDENT.
19. DESIGN DRAWINGS ARE DIAGRAMMATIC ONLY AND SHALL BE FOLLOWED AS CLOSELY AS ACTUAL CONSTRUCTION CONDITIONS WILL PERMIT. ANY ERROR, OMISSION, OR DESIGN DISCREPANCY SHALL BE BROUGHT TO THE ATTENTION OF THE T-MOBILE CONSTRUCTION SUPERVISOR FOR CLARIFICATION OR CORRECTION BEFORE CONSTRUCTION.
20. AS-BUILTS REQUIREMENTS: DO NOT USE RECORD DOCUMENTS FOR CONSTRUCTION PURPOSES. PROTECT RECORD DOCUMENTS FROM DETERIORATION AND LOSS IN A SECURE, FIRE-RESISTANT LOCATION. PROVIDE ACCESS TO RECORD DOCUMENTS FOR THE T-MOBILE CONSTRUCTION SUPERVISOR'S REFERENCE DURING NORMAL WORKING HOURS. MAINTAIN A CLEAN, UNDAMAGED SET OF BLUE OR BLACK LINE PRINTS OF CONTRACT DRAWINGS AND SHOP DRAWINGS. MARK THE SET TO SHOW THE ACTUAL INSTALLATION WHERE THE INSTALLATION VARIES SUBSTANTIALLY FROM THE WORK AS ORIGINALLY SHOWN. MARK WHICH DRAWINGS IS MOST CAPABLE OF SHOWING CONDITIONS FULLY AND ACCURATELY. WHERE SHOP DRAWINGS ARE USED, RECORD A CROSS-REFERENCE AT THE CORRESPONDING LOCATION ON THE CONTRACT DRAWINGS. GIVE PARTICULAR ATTENTION TO CONCEALED ELEMENTS THAT WOULD BE DIFFICULT TO MEASURE AND RECORD AT A LATER DATE. MARK RECORD SETS WITH RED ERASABLE PENCIL. USE OTHER COLORS TO DISTINGUISH Between VARIATIONS IN SEPARATE CATEGORIES OF THE WORK. MARK NEW INFORMATION THAT IS IMPORTANT TO THE OWNER BUT WAS NOT SHOWN ON THE CONTRACT DRAWINGS, DETAILS OR SHOP DRAWINGS. NOTE RELATED CHANGE ORDER NUMBERS WHERE APPLICABLE. NOTE RELATED RECORD DRAWING INFORMATION AND PRODUCT DATA. UPON COMPLETION OF THE WORK, SUBMIT ONE (1) COMPLETE SET OF RECORD DOCUMENTS TO THE T-MOBILE CONSTRUCTION SUPERVISOR FOR THE OWNER'S RECORDS.

PART 1: GENERAL

1.1 INSPECTION AND TESTING

A. FIELD TESTING OF EARTHWORK, AGGREGATE BASE COURSE, COMPACTION, AND CONCRETE TESTING SHALL BE PERFORMED BY THE CONTRACTOR'S INDEPENDENT TESTING LAB.
B. ALL WORK SHALL BE INSPECTED AND RELEASED BY THE T-MOBILE CONSTRUCTION SUPERVISOR WHO SHALL CARRY OUT THE GENERAL INSPECTION OF THE WORK WITH SPECIFIC CONCERN TO PROPER PERFORMANCE OF THE WORK AS SPECIFIED AND/OR CALLED FOR ON THE DRAWINGS. IT IS THE CONTRACTOR'S RESPONSIBILITY TO REQUEST TIMELY INSPECTIONS PRIOR TO PROCEEDING WITH FURTHER WORK THAT WOULD MAKE PARTS OF THE WORK INACCESSIBLE OR DIFFICULT TO INSPECT.

1.2 SITE MAINTENANCE AND PROTECTION

A. PROVIDE ALL NECESSARY JOB SITE MAINTENANCE FROM COMMENCEMENT OF THE WORK UNTIL COMPLETION OF THE CONTRACT.
B. CONTACT THE ONE-CALL UTILITY LOCATION SERVICE PRIOR TO ANY EXCAVATING ACTIVITIES TO HAVE LOCATIONS OF UNDERGROUND UTILITIES VERIFIED.
C. AVOID DAMAGE TO THE SITE INCLUDING EXISTING FACILITIES, STRUCTURES, TREES AND SHRUBS DESIGNATED TO REMAIN. TAKE PROTECTIVE MEASURES TO PREVENT EXISTING FACSIMILES THAT ARE NOT DESIGNATED FOR REMOVAL FROM BEING DAMAGED BY THE WORK.
D. KEEP SITE FREE OF ALL PONDING WATER.
E. PROVIDE EROSION CONTROL MEASURES IN ACCORDANCE WITH THE DEPARTMENT OF TRANSPORTATION CONSTRUCTION AND MATERIAL SPECIFICATIONS FOR THE STATE IN WHICH THE PROJECT IS LOCATED.
F. PROVIDE AND MAINTAIN ALL TEMPORARY FENCING, BARRICADES, WARNING SIGNALS AND SIMILAR DEVICES NECESSARY TO PROTECT LIFE AND PROPERTY DURING THE ENTIRE PERIOD OF CONSTRUCTION. REMOVE ALL SUCH DEVICES UPON COMPLETION OF THE WORK.

PART II: PRODUCTS

2.1 SUITABLE BACK FILL: EXCAVATED INORGANIC MATERIAL, COHESIVE AND NON-COHESIVE MATERIALS, INCLUDING GRAVEL, SAND, INORGANIC LEAN CLAY, GRAVEL SILT, GRAVEL CLAY, SAND CLAY, SAND SILT OR SILT CLAY MATERIAL FREE FROM FROZEN LUMPS, REFUSE, STONES OR ROCKS LARGER THAN 3-INCHES IN ANY DIMENSION OR OTHER MATERIAL THAT MAY MAKE THE INORGANIC MATERIAL UNSUITABLE FOR BACKFILL OR FILL MATERIAL AS DETERMINED BY THE T-MOBILE CONSTRUCTION SUPERVISOR AND GEOTECHNICAL ENGINEER.

2.2 SECURITY FENCE

A. PROVIDE AND INSTALL THE GALVANIZED FENCE WITH ASSOCIATED POSTS, RAILS, BRACES, FABRIC, TERMINAL POST, GATES, DROP BAR AND BARBED WIRE. USE APPLICABLE PROVISIONS OF ASTM FOR MATERIALS.
B. FABRIC SHALL BE HEAVY GALVANIZED CHAIN LINK FENCE, CONFORMING TO ASTM A392 2-INCH MESH 9 GAUGE WIRE 0.148 INCHES IN DIAMETER) WITH THE TOP AND BOTTOM SELVAGES TWISTED AND BARBED.
C. POSTS
1. LINE POST FOR FABRIC UP TO B FEET HIGH SHALL BE 2 J/B INCH O.D.
2. END CORNER, PULL POST AND GATE POST SHALL BE 2 7 /B INCH O.D.
ALL POSTS SHALL BE SCHEDULE 40 GALVANIZED STEEL PIPE IN ACCORDANCE WITH ASTM A112, A570 AND A525. FOR FENCE OVER 8 FEET HIGH, SIZE POST ACCORDING TO MANUFACTURER'S RECOMMENDATIONS.
D. TOP RAILS SHALL CONFORM TO 1 1/4 INCH (1.66 O.D.), SCHEDULE 40 GALVANIZED STEEL PIPE IN ACCORDANCE WITH ASTM4 A12D.
E. TENSION WIRE SHALL BE 7 GAUGE U.S. STEEL WIRE GALVANIZED IN ACCORDANCE WITH ASTM A116, COATING CLASS III.
F. BRACE BANDS, TENSION BANDS AND TENSION BARS SHALL BE FABRICATED OF 1/8 INCH BY 7/8 INCH GALVANIZED STEEL WITH GALVANIZED STEEL CARRIAGE BOLTS AND NUTS IN ACCORDANCE WITH ASTM4 A123. TENSION BARS SHALL BE 1/4 INCH BY 3/4 INCH GALVANIZED STEEL BAR IN ACCORDANCE WITH ASTM A153.
G. FABRIC TIES SHALL BE CLASS I GALVANIZED STEEL WIRE NO LESS THAN 9 GAUGE.
H. POST TOPS SHALL BE PRESSED STEEL OR f.IALLEABLE IRON AND SHALL BE GALVANIZED PER ASTM A15J.
I. BARBED WIRE SHALL CONSIST OF DOUBLE STRANDED 12 1/2 GAUGE WIRE ASTM A121, CLASS 3 WITH 4-POINT BARBS SPACED 5 INCHES APART. THE TOP 1 FOOT OF THE FENCE SHALL CONSIST OF 3 STRANDS OF BARBED WIRE ATTACHED TO 45 DEGREE ANGLE, HEAVY-PRESSED ARMS CAPABLE OF WITHSTANDING WITHOUT FAILURE 250 POUNDS DOWNWARD PULL AT THE OUTERMOST END OF THE ARf.I.
J. GATE MATERIALS, SUCH AS FABRIC, BOLTS, NUTS, TENSION BARS AND BARBED WIRE SHALL BE CONSISTENT WITH FENCE MATERIALS.

PART III: EXECUTION

3.1 GENERAL

A. BEFORE STARTING GENERAL SITE PREPARATION ACTIVITIES, INSTALL EROSION AND SEDIMENT CONTROL MEASURES. THE WORK AREA SHALL BE CONSTRUCTED AND MAINTAINED IN SUCH CONDITION THAT IN THE EVENT OF RAIN THE SITE WILL BE WELL DRAINED AT ALL TIMES.
B. PERFORM ALL SURVEY, LAYOUT, STAKING AND MARKING TO ESTABLISH AND MAINTAIN ALL LINES, GRADES, ELEVATIONS AND BENCHMARKS NEEDED FOR EXECUTION OF THE WORK.

3.2 TRENCH EXCAVATION

A. UTILITY TRENCHES SHALL BE EXCAVATED TO THE LINES AND GRADES SHOWN ON THE DRAWINGS OR AS DIRECTED BY THE T-MOBILE CONSTRUCTION SUPERVISOR. PROVIDE SHORING, SHEETING AND BRACING AS REQUIRED TO PREVENT CAVING OR SLOUGHING OF THE TRENCH WALLS.
B. THE TRENCH WIDTH EXTENDS A MINIMUM OF 6 INCHES BEYOND EACH OUTSIDE EDGE OF THE CONDUIT OR OUTERMOST CONDUIT, WHICHEVER IS APPLICABLE.
C. WHEN SOFT, YIELDING OR OTHERWISE UNSTABLE SOIL CONDITIONS ARE ENCOUNTERED AT THE REQUIRED TRENCH BOTTOM ELEVATION, OVER-EXCAVATE THE TRENCH TO A DEPTH OF NO LESS THAN 12 INCHES BELOW THE REQUIRED ELEVATION AND BACKFILL WITH GRANULAR BEDDING MATERIAL.

3.3 TRENCH BACK FILL

A. PROVIDE GRANULAR BEDDING MATERIAL IN ACCORDANCE WITH THE SPECIFICATIONS, DRAWINGS AND THE UTILITY REQUIREMENTS.
B. NOTIFY THE T-MOBILE CONSTRUCTION SUPERVISOR 24 HOURS IN ADVANCE OF BACK FILLING
C. CONDUCT UTILITY CHECK TESTS BEFORE BACK FILLING BACK FILL AND COMPACT TRENCH BEFORE ACCEPTANCE TESTING.
D. PLACE GRANULAR TRENCH BACKFILL UNIFORMLY ON BOTH SIDES OF THE CONDUITS IN 6-INCH UNCOMPACTED LIFTS UNTIL 12 INCHES OVER THE CONDUITS. SOLIDLY RAM AND TAMP BACKFILL INTO SPACES AROUND THE CONDUITS.
E. PROTECT CONDUIT FROf.I LATERAL MOVEMENT, DAMAGE FROM IMPACT OR UNBALANCED LOADING.
F. ABOVE THE CONDUIT EMBEDMENT ZONE, PLACE AND COMPACT SATISFACTORY BACKFILL MATERIAL IN 9-INCH MAXIMUM LOOSE THICKNESS LIFTS TO RESTORE THE REQUIRED FINISHED SURFACE GRADE.
G. COMPACT FINAL TRENCH BACKFILL TO A DENSITY EQUAL TO OR GREATER THAN THAT OF THE EXISTING UNDISTURBED MATERIAL IMMEDIATELY ADJACENT TO THE TRENCH BUT NO LESS THAN A MINIMUM OF 95% OF THE MAXIMUM DRY DENSITY AS PROVIDED BY THE MODIFIED PROCTOR TEST, ASTM D1557

GENERAL NOTES

SCALE:	
NTS	1

T-MOBILE

T-MOBILE WEST, LLC
2323 DELGANY STREET
DENVER, CO 80216

POWDER RIVER
Engineering Services, LLC
www.powderriverdev.com

LICENSE #: N/A

REVISIONS

REV	DATE	DESCRIPTION	INT
B	06/13/16	ISSUED FOR REVIEW 90%	JE
A	05/10/16	ISSUED FOR REVIEW 90%	JE

SITE INFORMATION

DN04163B
SW SPRINGS

2520 ARLINGTON DR.
COLORADO SPRINGS, CO
80910

SHEET TITLE:

GENERAL NOTES

SHEET NUMBER:

GN-1

CPC CM1 16-00070

FIGURE 1

PROJECT SPECIFICATION 16000 (ELECTRICAL)
PART 1: GENERAL
1.1 SCOPE' THIS SPECIFICATION DESCRIBES THE MINIMUM REQUIREMENT FOR INSTALLATION OF ALL ELECTRICAL SYSTEMS.
1.2 REFERENCES: THE PUBLICATIONS LISTED BELOW FORM PART OF THIS SPECIFICATION. EACH PUBLICATION SHALL BE THE LATEST REVISION AND ADDENDUM IN EFFECT ON THE DATE THIS SPECIFICATION IS ISSUED FOR CONSTRUCTION, UNLESS NOTED OTHERWISE. EXCEPT AS MODIFIED BY THE REQUIREMENTS SPECIFIED HEREIN, OR THE DETAILS OF THE DRAWINGS, WORK INCLUDED IN THIS SPECIFICATION SHALL CONFORM TO THE APPLICABLE PROVISIONS OF THESE PUBLICATIONS.
A. ANSI (AMERICAN NATIONAL STANDARDS INSTITUTE)
B. NESC (NATIONAL ELECTRICAL SAFETY CODE), LATEST EDITION
C. NEC (NATIONAL ELECTRICAL CODE), LATEST EDITION
D. NFPA 70 (NATIONAL FIRE PROTECTION ASSOCIATION)
E. OSHA (OCCUPATIONAL SAFETY AND HEALTH ADMINISTRATION), INCLUDING ALL APPLICABLE AMENDMENTS
F. U.L. (UNDERWRITERS LABORATORIES)
1.3 SYSTEM DESCRIPTION
A. DESIGN REQUIREMENTS: THE CONTRACTOR SHALL INSTALL UNDERGROUND ELECTRICAL AND TELEPHONE CONDUITS AND CABLE AS SPECIFIED HEREIN AND AS SHOWN ON THE DRAWINGS.
B. PERFORMANCE REQUIREMENTS: WHEN FINISHED, WORK SHALL BE IN A COMPLETE AND UNDAMAGED STATE, AS REQUIRED IN THE CONTRACT DOCUMENTS.
PART II: PRODUCTS
2.1 GENERAL
A. ITEMS SHALL BE NEW AND SHALL BE INSTALLED ONLY IF IN FIRST–CLASS CONDITION.
B. SUBSTITUTIONS FOR MATERIAL WILL BE PERMITTED ONLY BY WRITTEN APPROVAL OF THE T –MOBILE CONSTRUCTION SUPERVISOR.
2.2 MATERIALS: THE CONTRACTOR SHALL PROVIDE ALL MATERIAL EXCEPT AS SPECIFIED IN THE CONTRACT DOCUMENTS. ALL MATERIAL SHALL BE APPROVED AND LISTED BY OR BEAR THE U.L. LABEL, AND WILL COMPLY WITH ANSI, IEEE AND NEMA STANDARDS WHERE APPLICABLE.
A. CONDUITS:
1. ALL UNDERGROUND CONDUIT SHALL BE SCHEDULE 40 PVC, SIZED AS SHOWN ON THE CONSTRUCTION DRAWINGS.
2. ALL EXTERIOR ABOVEGROUND CONDUIT SHALL BE PER LOCAL CODE REQUIREMENTS.
3. ALL INTERIOR CONDUIT SHALL BE EMT WITH COMPRESSION–TYPE FITTINGS.
4. LIQUID–TIGHT FLEXIBLE METALLIC CONDUIT SHALL BE USED FOR OUTDOOR LOCATIONS WHERE FLEXIBLE CONNECTION IS REQUIRED.
B. CABLES' CONDUCTORS FOR GENERAL WIRING SHALL BE NEC STANDARD ANNEALED COPPER WIRE WITH NEC 600 VOLT INSULATION.
1. #8 AND LARGER–STRANDED TYPE, THHN OR THWN
2. #10 AND SMALLER–SOLID TYPE THHN OR THWN
3. CONDUCTORS IN CONDUIT IN OR ADJACENT TO HIGH HEAT SOURCE SHALL BE TYPE XHHW
4. CONDUCTORS IN CONDUITS ABOVE ROOF, ON TOP OF ROOF OR INSIDE BUILT–UP ROOFING MATERIAL SHALL BE TYPE XHHW
C. CONVENIENCE OUTLET' UNLESS NOTED OTHERWISE, SURFACE–MOUNTED OUTLETS FOR EXTERIOR LOCATIONS SHALL BE FERALOY, CAD/ZINC ELECTROPLATED WITH THREADED HUBS OR CONDUIT ENTRANCES DRILLED AND TAPPED. ALL COVERS SHALL BE SELF–CLOSING AND GASKETED. SURFACE MOUNTED OUTLETS FOR INTERIOR LOCATIONS SHALL BE GALVANIZED, PRESSED STEEL WITH COVER PLATE, SIERRA PLASTIC STYLE, IVORY COLOR.
D. COAXIAL CABLE SUPPORTS 1. ALL WAVE GUIDE SUPPORTS SHALL BE MANUFACTURED TO MEET ALL COAX MINIMUM BENDING REQUIREMENTS WAVE GUIDES, AND B1587 FOR 6 WAVE GUIDES. SUPPORTS SHALL BE PROVIDED 3' –0" ON CENTERS.
PART III: EXECUTION
3.1 PREPARATION
A. BEFORE LAYING OUT WORK, EXERCISE PROPER PRECAUTION TO VERIFY EACH MEASUREMENT.
B. USE EXTREME CAUTION BEFORE EXCAVATING IN EXISTING AREAS TO LOCATE EXISTING UNDERGROUND SERVICES.
3.2 INSPECTION
A. A VISUAL CHECK OF ELECTRICAL AND TELEPHONE CABLES, CONDUITS AND OTHER ITEMS SHALL BE MADE BY AN T –MOBILE CONSTRUCTION SUPERVISOR BEFORE THESE ITEMS ARE PERMANENTLY INSTALLED.
B. THE CONTRACTOR SHALL NOTIFY THE T –MOBILE CONSTRUCTION SUPERVISOR 24 HOURS PRIOR TO TRENCH BACK FILL

3.3 INSTALLATION
A. TRENCHING, BACK FILLING, BEDDING AND COMPACTING SHALL COMPLY WITH SITE WORK SPECIFICATIONS.
B. DIG TRENCHES TO THE REQUIRED DEPTH AS SHOWN ON THE DRAWINGS WITHOUT POCKETS OR DIPS. REMOVE LARGE STONES FROM THE BOTTOM OF THE TRENCH AND FIRMLY TAMP LOOSE FILL IN THE BOTTOM BEFORE CONDUIT IS LAID.
C. INSTALL UNDERGROUND CONDUIT WITH A MINIMUM 3–INCH TO 1 00–FOOT SLOPE OR TO A SLOPE SHOWN ON THE DRAWINGS.
D. UNLESS SHOWN OTHERWISE ON THE DRAWINGS, TERMINATE AND CAP ALL STUB–UPS 12 INCHES ABOVE FINISHED GRADE ELEVATION.
E. WHEREVER CONDUITS CROSS UNDER ROADWAYS, USE GALVANIZED RIGID STEEL CONDUITS IN ALL CASES, EXTENDING 5 FEET BEYOND THE EDGE OF THE ROAD BED. MINIMUM DEPTH FOR CONDUIT SHALL BE 4 FEET BELOW ROADWAY GRADE.
F. MARK UNDERGROUND CONDUITS WITH A 6–INCH WIDE RED POLYETHYLENE TAPE BURIED 6 INCHES UNDER THE SURFACE DIRECTLY OVER THE CONDUITS. MARK THE TAPE THUS: CAUTION–BURIED ELECTRICAL CABLE.
G. FOR SEALING CONDUITS, USE ONLY NONTHERMOPLASTIC COMPOUNDS SUCH AS J.M. DUXSEAL, OR AN APPROVED SUBSTITUTE. THE COMPOUND SHALL HAVE NO EFFECT ON RUBBER OR RUBBER–LIKE INSULATIONS, LEAD, ALUMINUM OR FERROUS ALLOYS; IT SHALL BE INSOLUBLE IN WATER AND WITHSTAND MAXIMUM TEMPERATURE RANGES OF THE LOCALITY.
H. COAXIAL – REFER TO NOKIA ANTENNA AND COAXIAL CABLE INSULATION PROCEDURES.
I. ANTENNA – REFER TO NOKIA ANTENNA AND COAXIAL CABLE INSULATION PROCEDURES.
J. LNA/MHA – REFER TO NOKIA ANTENNA AND COAXIAL CABLE INSULATION PROCEDURES.
END OF ELECTRICAL SPECIFICATIONS

PROJECT SPECIFICATION 16670 (GROUNDING)
PART 1: GENERAL
1.1 SCOPE
A. THIS SPECIFICATION PRESCRIBES THE REQUIREMENTS FOR FURNISHING, INSTALLATION AND TESTING OF THE GROUNDING CABLE, CONNECTORS AND ASSOCIATED COMPONENTS AS INDICATED ON THE DRAWINGS.
B. APPLICATIONS OF ELECTRICAL GROUNDING AND BONDING WORK SPECIFIED IN THIS SPECIFICATION INCLUDE THE FOLLOWING:
1. FENCE AND GATE POSTS
2. ELECTRICAL POWER SYSTEMS
3. GROUNDING ELECTRODES
4. GROUND BUS BAR
5. SERVICE EQUIPMENT
6. ENCLOSURES
7. MONOPOLE/LATTICE TOWER
B. ICE BRIDGE
1.2 REFERENCES: THE PUBLICATIONS LISTED BELOW FORM PART OF THIS SPECIFICATION. EACH PUBLICATION SHALL BE THE LATEST REVISION AND ADDENDUM IN EFFECT ON THE DATE THIS SPECIFICATION IS ISSUED FOR CONSTRUCTION, UNLESS NOTED OTHERWISE. EXCEPT AS MODIFIED BY THE REQUIREMENTS SPECIFIED HEREIN, OR THE DETAILS OF THE DRAWINGS, WORK INCLUDED IN THIS SPECIFICATION SHALL CONFORM TO THE APPLICABLE PROVISIONS OF THESE PUBLICATIONS.
A. ANSI (AMERICAN NATIONAL STANDARDS INSTITUTE)
B. IEEE (INSTITUTE OF ELECTRICAL AND ELECTRONICS ENGINEERS)
C. NEC (NATIONAL ELECTRICAL CODE), latest edition
D. NEMA (NATIONAL ELECTRICAL MANUFACTURERS ASSOCIATION)
E. NESC (NATIONAL ELECTRICAL SAFETY CODE), latest edition
F. OSHA (OCCUPATIONAL SAFETY AND HEALTH ADMINISTRATION)
G. U.L. (UNDERWRITERS LABORATORIES)
H. APPLICABLE LOCAL CODES AND ORDINANCES
PART II' PRODUCTS
2.1 MATERIALS' EXCEPT AS OTHERWISE INDICATED, PROVIDE ELECTRICAL GROUNDING AND BONDING SYSTEMS INDICATED; WITH ASSEMBLY OF MATERIAL, INCLUDING, BUT NOT LIMITED TO, GROUNDING ELECTRODES, BONDING JUMPER AND ADDITIONAL ACCESSORIES NEEDED FOR A COMPLETE INSTALLATION. WHERE MORE THAN ONE TYPE COMPONENT PRODUCT MEETS INDICATED REQUIREMENTS, SELECTION IS INSTALLER'S OPTION. WHERE MATERV\LS OR COMPONENTS ARE NOT INDICATED, PROVIDE PRODUCTS WHICH COMPLY WITH NEC, U.L. AND IEEE REQUIREMENTS AND WITH ESTABLISHED INDUSTRY STANDARDS FOR THOSE APPLICATIONS INDICATED.
A. GROUNDING
1. THE EQUIPMENT SHALL BE GROUNDED AS FOLLOWS, AS SHOWN ON THE DRAWINGS AND IN COMPLIANCE WITH NEC ARTICLE 250 AND STATE AND LOCAL CODES.
2. GROUND RODS AND QUANTITY SHOWN ON THE DRAWINGS ARE DIAGRAMMATIC. THE CONTRACTOR SHALL PERFORM A GROUND–RESISTANCE–TO–EARTH TEST. SHOULD THE INSTALLATION HAVE A RESISTANCE OF 5 OHMS OR MORE, CONTRACTOR SHALL INSTALL MORE GROUND RODS AS NECESSARY SO THAT THE OVERALL GROUND–TO–EARTH RESISTANCE IS LESS THAN 5 OHMS.
3. INSTALL ELECTRICAL GROUNDING AND BONDING SYSTEMS AS INDICATED, IN ACCORDANCE WITH MANUFACTURER'S INSTRUCTIONS, NEC'S "STANDARD OF INSTALLATION," AND IN ACCORDANCE WITH RECOGNIZED INDUSTRY PRACTICES TO ENSURE THAT PRODUCTS COMPLY WITH REQUIREMENTS.
4. COORDINATE WITH OTHER ELECTRICAL WORK AS NECESSARY TO INTERFACE INSTALLATION OF ELECTRICAL GROUNDING AND BONDING SYSTEMS.
5. INSTALL GROUND CONDUCTORS A MINIMUM OF 36 INCHES BELOW FINISHED GRADE WHICH ENCIRCLES THE TOWER AND EQUIPMENT AND ARE CONNECTED TO EACH DRIVEN GROUND ROD. GROUND TRENCH SHALL BE AT LEAST 24 INCHES AWAY FROM FOUNDATIONS.
6. TIGHTEN GROUNDING AND BONDING CONNECTORS, INCLUDING SCREWS AND BOLTS, IN ACCORDANCE WITH MANUFACTURER'S PUBLISHED TORQUE TIGHTENING VALUE FOR CONNECTORS AND BOLTS. WHERE MANUFACTURER'S TORQUING REQUIREMENTS ARE NOT INDICATED, TIGHTEN CONNECTIONS TO COMPLY WITH TIGHTENING TORQUE VALUE SPECIFIED IN U.L. 486A TO ASSURE PERMANENT AND EFFECTIVE GROUNDING.
7. APPLY CORROSION–RESISTANT FINISH (NO–OX) TO FIELD–CONNECTIONS, AT COPPER GROUND BARS AND PLACES WHERE FACTORY APPLIED PROTECTIVE COATING HAVE BEEN DESTROYED, WHICH ARE SUBJECTED TO CORROSIVE AND/OR OXIDATION PROCESS.

B. ON EXISTING LATTICE TOWERS, WATER TOWERS AND ROOF TOPS WHEN A NEW GROUNDING SYSTEM IS INSTALLED, THE CONTRACTOR SHALL TIE THE NEW GROUND SYSTEM TO THE EXISTING WATER TOWER, LATTICE TOWER STRUCTURAL STEEL OR BUILDING STRUCTURAL STEEL AS THE CASE MAY BE AT LEAST AT ONE LOCATION SO THAT THEY ARE AT THE SAME POTENTIAL.
B. GROUND RODS
1. GROUND RODS SHALL BE 5/8" DIAMETER 8' –0" LONG, COPPER CLAD DRIVEN ROD(S).
2. GROUND ROD(S) SHALL BE LOCATED AT THE PERIMETER OF EQUIPMENT AS TO CREATE A GROUND RING AS SHOWN ON THE DRAWINGS.
3. GROUND ROD(S) SHALL BE SPACED AT A MINIMUM SPACING OF B' –0" AND A MAXIMUM SPACING OF 1 0' –0".
4. GROUND RODS SHELL BE BURIED BELOW THE FROSTLINE. AT NO TIME SHALL THIS DEPTH BE LESS THAN 18" BELOW FINISHED GRADE.
5. GROUND RODS WHICH CANNOT BE DRIVEN STRAIGHT DOWN THE ENTIRE (10) FEET, SHALL BE DRIVEN AT AN ANGLE NOT GRATER THAN 45 DEGREES (NEC 250–83 AND 250–84).
6. GROUND ROD LOCATIONS SHALL BE NOTED ON THE AS–BUILT DRAWING COMPLETE WITH DIMENSIONS.
7. PROVIDE GROUND TEST WELLS AS SHOWN ON THE CONSTRUCTION DRAWINGS.
C. GROUND CONDUCTOR
1. ALL DIRECT BURIED GROUND CONDUCTORS SHALL BE TINNED SOLID (#2 AWG) WIRE. BURIED GROUND CONDUCTOR SHALL BE INSTALLED AT MINIMUM DEPTH OF 36" BELOW GRADE.
2. ALL SUB GRADE GROUND CONNECTIONS SHALL BE MADE THROUGH THE USE OF EXOTHERMIC WELD PROCESS. CONNECTIONS SHALL INCLUDE ALL CABLE TO CABLE SPLICES, TEES AND ALL GROUND ROD CONNECTIONS. MOLD, WELD KITS, ETC., SHALL BE MANUFACTURED BY CADWELD AND SHALL BE INSTALLED AS PER THE MANUFACTURER'S INSTRUCTIONS.
3. GROUND CONDUCTORS SHALL BE ROUTED IN THE SHORTEST AND STRAIGHTEST DISTANCES POSSIBLE TO MINIMIZE TRANSIENT VOLTAGE RISES. CONDUCTORS SHALL BE INSTALLED AS FOLLOWS'
A. ALL GROUND CONDUCTORS SHALL FOLLOW A CONTINUOUS DOWNWARD PATTERN TO THE GROUND SOURCE. (NEVER RUN GROUND CONDUCTOR IN AN UPWARD DIRECTION.)
B. CONDUCTORS SHALL BE INSTALLED WITH A MINIMUM OF 12 INCH MINIMUM BENDING RADIUS.
C. WHEN THE MINIMUM BENDING RADIUS CANNOT BE ACHIEVED, GROUND CABLES SHALL BE ROUTED AT 90 DEGREE BENDS WITH THE USE OF EXOTHERMIC CONNECTIONS AT 90 DEGREES. THE INTENT IS TO ELIMINATE THE CABLE BEND RADIUS AND REPLACE THE RADIUS WITH AN EXOTHERMIC CONNECTION.
PART III: EXECUTION
3.1 PREPARATION
A. ALL SURFACES TO WHICH GROUND CONNECTIONS WILL BE MADE SHALL BE FREE OF PAINT, GALVANIZING DIRECT CORROSION ETC ..
B. ALL METAL SURFACES EXPOSED ON GROUNDING SHALL BE EITHER COLD GALVANIZE, OR PAINTED TO MATCH ORIGINAL SURFACE.

3.2 EXAMINATION.
A. EXAMINE AREAS AND CONDITIONS UNDER WHICH ELECTRICAL GROUNDING AND BONDING CONNECTIONS ARE TO BE MADE AND NOTIFY T –MOBILE CONSTRUCTION SUPERVISOR IN WRITING OF CONDITIONS DETRIMENTAL TO PROPER COMPLETION OF WORK. DO NOT PROCEED WITH WORK UNTIL UNSATISFACTORY CONDITIONS HAVE
B. THE CONTRACTOR SHALL NOTIFY THE T –MOBILE CONSTRUCTION SUPERVISOR 24 HOURS PRIOR TO TRENCH BACK FILL ALL WORK DONE BELOW FINISHED GRADE SHALL BE INSPECTED BY THE AERIAL CONSTRUCTION SUPERVISOR DURING THAT PERIOD OR THE CONTRACTOR SHALL PROCEED.
3.3 GROUND TESTING
A. THE CONTRACTOR SHALL TEST THE GROUND ELECTRODE ROD RESISTANCE IN ACCORDANCE WITH THE METHODS OF MEASUREMENT SHOWN IN THE FALL OF POTENTIAL METHOD.
B. TEST INSTRUMENTS SHALL OPERATE AT A FREQUENCY OTHER THAN 60 HERTZ AND SHALL CONTAIN STRAY CURRENT AND DC FILTERS, FAULT CURRENT PROTECTION AND HAVE SENSITIVITY TO OPERATE A LOW SIGNAL STRENGTH.
C. PRIOR TO TESTING, THE CONTRACTOR SHV\LL DE –ENERGIZE ALL POWER SOURCES, DISCONNECT THE ELECTRODE CONDUCTOR FROM THE GROUND ROD, WEAR HIGH VOLTAGE RUBBER SAFETY GLOVES AND WILL NOT HANDLE TEST INSTRUMENTS IF AT ALL POSSIBLE.
D. GROUND TESTS ARE TO BE PERFORMED BY QUALIFIED PERSONS FAMILIAR WITH THE CONSTRUCTION AND OPERATION OF THE EQUIPMENT AND THE HAZARDS INVOLVED.
E. AN INDEPENDENT, APPROVED OUTSIDE FIRM SHALL PERFORM THE GROUND TEST AS OUTLINED. ALL TEST RESULTS SHALL BE FORWARDED TO THE T –MOBILE CONSTRUCTION SUPERVISOR FOR APPROVAL.
END OF GROUNDING SPECIFICATIONS
CLOSE OUT DOCUMENTATION
CLOSEOUT BOOK CONTAINING THE FOLLOWING'
1. AS BUILT DESIGN DRAWINGS
2. SWEEP TEST RESULTS
3. RESISTIVELY TEST
4. PHOTO DOCUMENTATION OF'
– UNDERGROUND CONDUITS AND GROUND RING
– ANTENNA, COAXV\L, JUMPER ATTACHMENTS AND GROUND KIT ATTACHMENTS
– ANTENNA DOWN TILT MEASUREMENT USING AN INCLINOMETER ON THE BACK PLANE OF THE ANTENNA
– GROUND BAR ATTACHMENTS
5. SIGNED OFF PERMIT CARDS
6. CERTIFICATE OF OCCUPANCY
7. RETURN OF KEYS AND/OR ACCESS AUTHORIZATION
B. ORIGINAL BUILDING PERMIT

GENERAL NOTES

SCALE:	
NTS	1

T-Mobile

T–MOBILE WEST, LLC
2323 DELGANY STREET
DENVER, CO 80216

POWDER RIVER
Engineering Services, LLC
www.powderriverdev.com

LICENSE #: N/A

REVISIONS

REV	DATE	DESCRIPTION	INT
B	06/13/16	ISSUED FOR REVIEW 90%	JE
A	05/10/16	ISSUED FOR REVIEW 90%	JE

SITE INFORMATION

DN04163B
SW SPRINGS

2520 ARLINGTON DR.
COLORADO SPRINGS, CO
80910

SHEET TITLE:

GENERAL NOTES

SHEET NUMBER:

GN-2

CPC CM1 16–00070

FIGURE 1

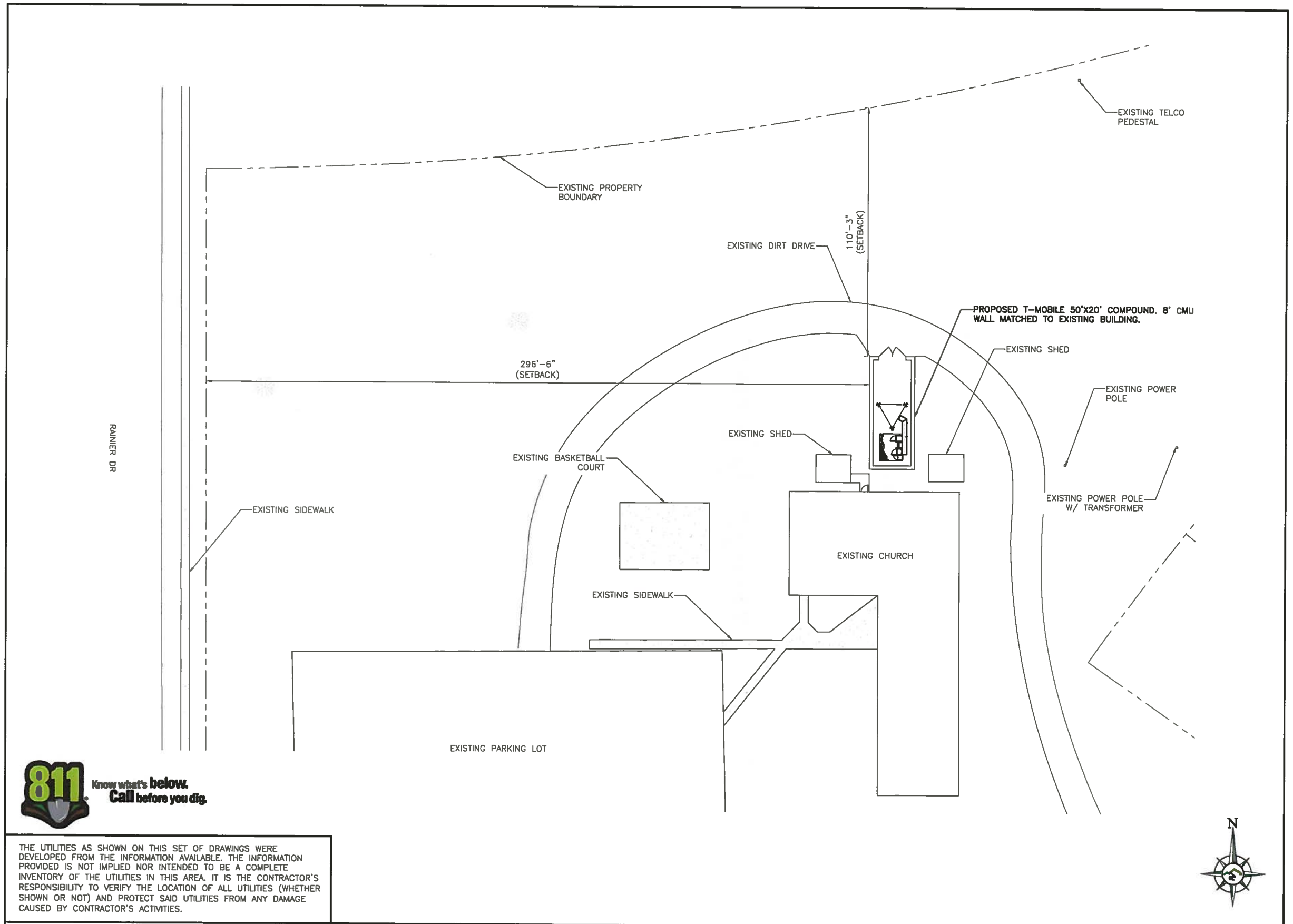

811 Know what's below. Call before you dig.

THE UTILITIES AS SHOWN ON THIS SET OF DRAWINGS WERE DEVELOPED FROM THE INFORMATION AVAILABLE. THE INFORMATION PROVIDED IS NOT IMPLIED NOR INTENDED TO BE A COMPLETE INVENTORY OF THE UTILITIES IN THIS AREA. IT IS THE CONTRACTOR'S RESPONSIBILITY TO VERIFY THE LOCATION OF ALL UTILITIES (WHETHER SHOWN OR NOT) AND PROTECT SAID UTILITIES FROM ANY DAMAGE CAUSED BY CONTRACTOR'S ACTIVITIES.

OVERALL SITE PLAN

20' 0 10' 20'

SCALE: 1" = 20' (24x36)
(OR) 1" = 40' (11x17)

1

T-Mobile
T-MOBILE WEST, LLC
2323 DELGANY STREET
DENVER, CO 80216

POWDER RIVER
Engineering Services, LLC
www.powderriverdev.com

LICENSE #: N/A

REVISIONS

REV	DATE	DESCRIPTION	INT
B	06/13/16	ISSUED FOR REVIEW 90%	JE
A	05/10/16	ISSUED FOR REVIEW 90%	JE

SITE INFORMATION

DN04163B
SW SPRINGS

2520 ARLINGTON DR.
COLORADO SPRINGS, CO
80910

SHEET TITLE:
OVERALL SITE PLAN

SHEET NUMBER:
C-1
CPC CM1 16-00070

FIGURE 1

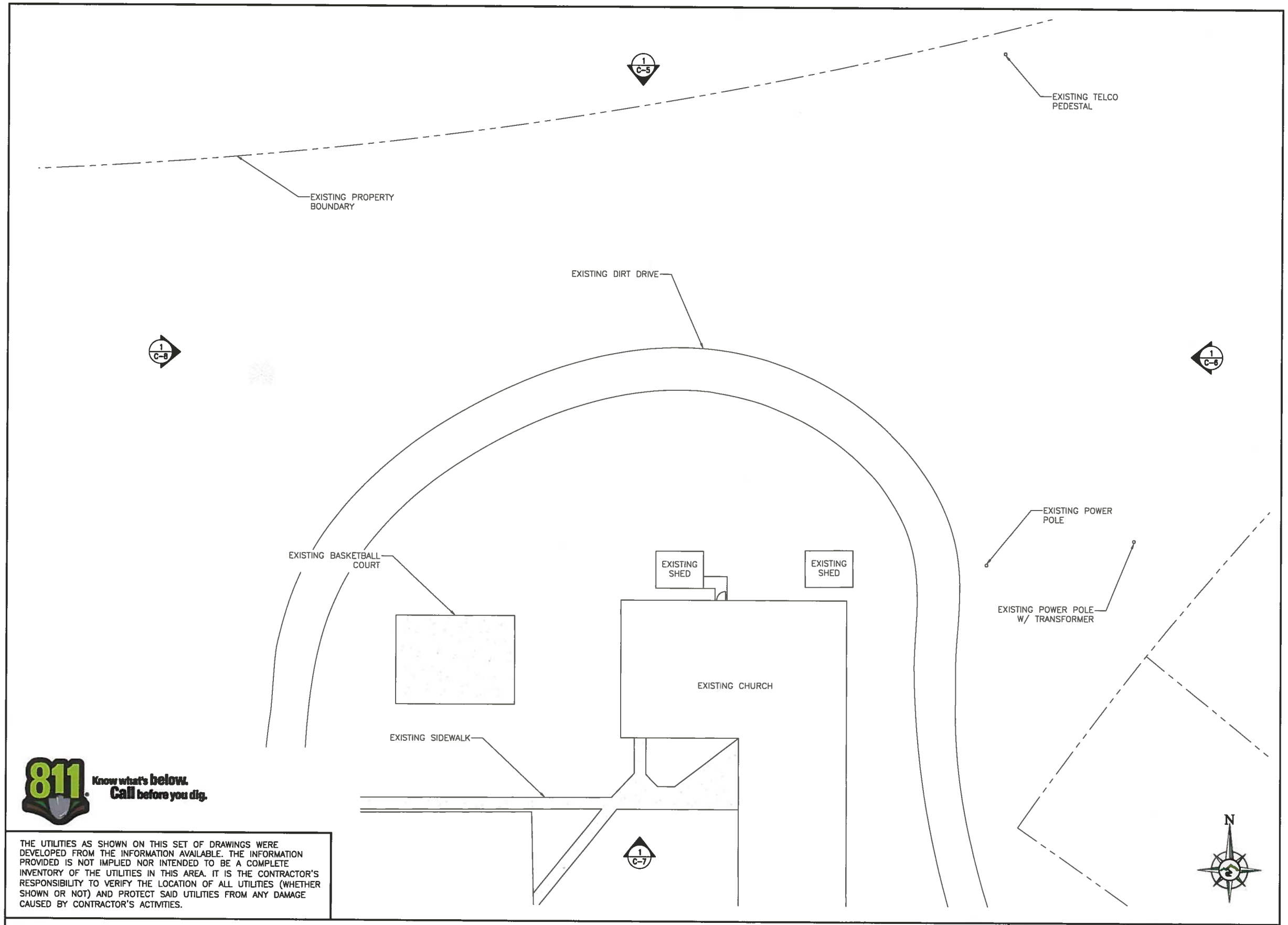

811 Know what's below. Call before you dig.

THE UTILITIES AS SHOWN ON THIS SET OF DRAWINGS WERE DEVELOPED FROM THE INFORMATION AVAILABLE. THE INFORMATION PROVIDED IS NOT IMPLIED NOR INTENDED TO BE A COMPLETE INVENTORY OF THE UTILITIES IN THIS AREA. IT IS THE CONTRACTOR'S RESPONSIBILITY TO VERIFY THE LOCATION OF ALL UTILITIES (WHETHER SHOWN OR NOT) AND PROTECT SAID UTILITIES FROM ANY DAMAGE CAUSED BY CONTRACTOR'S ACTIVITIES.

EXISTING SITE PLAN

15' 0 15'

SCALE: 1" = 15' (24x36)
(OR) 1" = 30' (11x17)

1

T-Mobile

T-MOBILE WEST, LLC
2323 DELGANY STREET
DENVER, CO 80216

POWDER RIVER
Engineering Services, LLC
www.powderriverdev.com

LICENSE #: N/A

REVISIONS

REV	DATE	DESCRIPTION	INT
B	06/13/16	ISSUED FOR REVIEW 90%	JE
A	05/10/16	ISSUED FOR REVIEW 90%	JE

SITE INFORMATION

DN04163B
SW SPRINGS

2520 ARLINGTON DR.
COLORADO SPRINGS, CO
80910

SHEET TITLE:
EXISTING SITE PLAN

SHEET NUMBER:
C-2
CPC CM1 16-00070

FIGURE 1

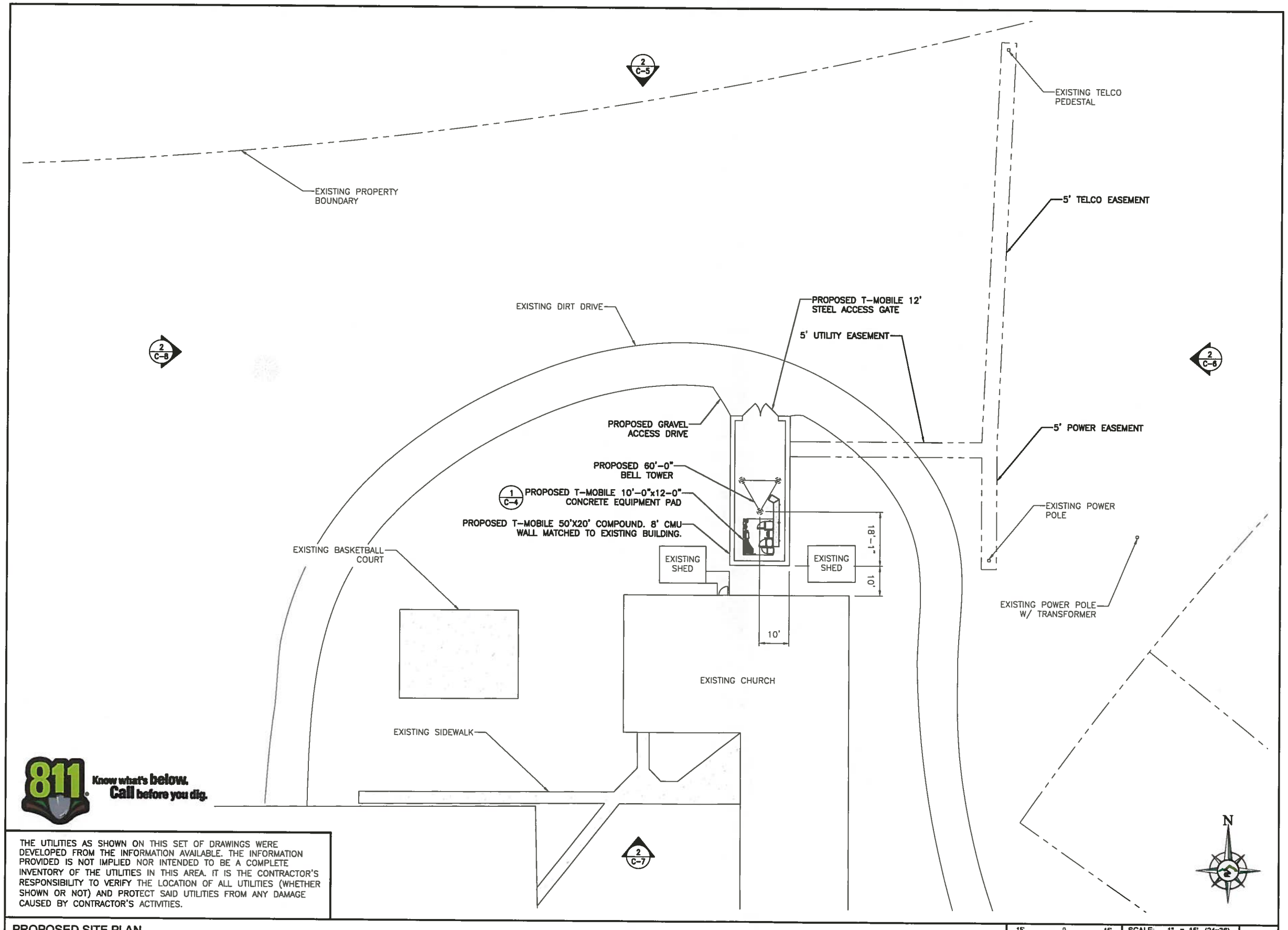

THE UTILITIES AS SHOWN ON THIS SET OF DRAWINGS WERE DEVELOPED FROM THE INFORMATION AVAILABLE. THE INFORMATION PROVIDED IS NOT IMPLIED NOR INTENDED TO BE A COMPLETE INVENTORY OF THE UTILITIES IN THIS AREA. IT IS THE CONTRACTOR'S RESPONSIBILITY TO VERIFY THE LOCATION OF ALL UTILITIES (WHETHER SHOWN OR NOT) AND PROTECT SAID UTILITIES FROM ANY DAMAGE CAUSED BY CONTRACTOR'S ACTIVITIES.

PROPOSED SITE PLAN

T-Mobile

T-MOBILE WEST, LLC
2323 DELGANY STREET
DENVER, CO 80216

POWDER RIVER
Engineering Services, LLC
www.powderriverdev.com

LICENSE #: N/A

REVISIONS

REV	DATE	DESCRIPTION	INT
B	06/13/16	ISSUED FOR REVIEW 90%	JE
A	05/10/16	ISSUED FOR REVIEW 90%	JE

SITE INFORMATION

DN04163B
SW SPRINGS

2520 ARLINGTON DR.
COLORADO SPRINGS, CO
80910

SHEET TITLE:
PROPOSED SITE PLAN

SHEET NUMBER:
C-3
CPC CM1 16-00070

FIGURE 1

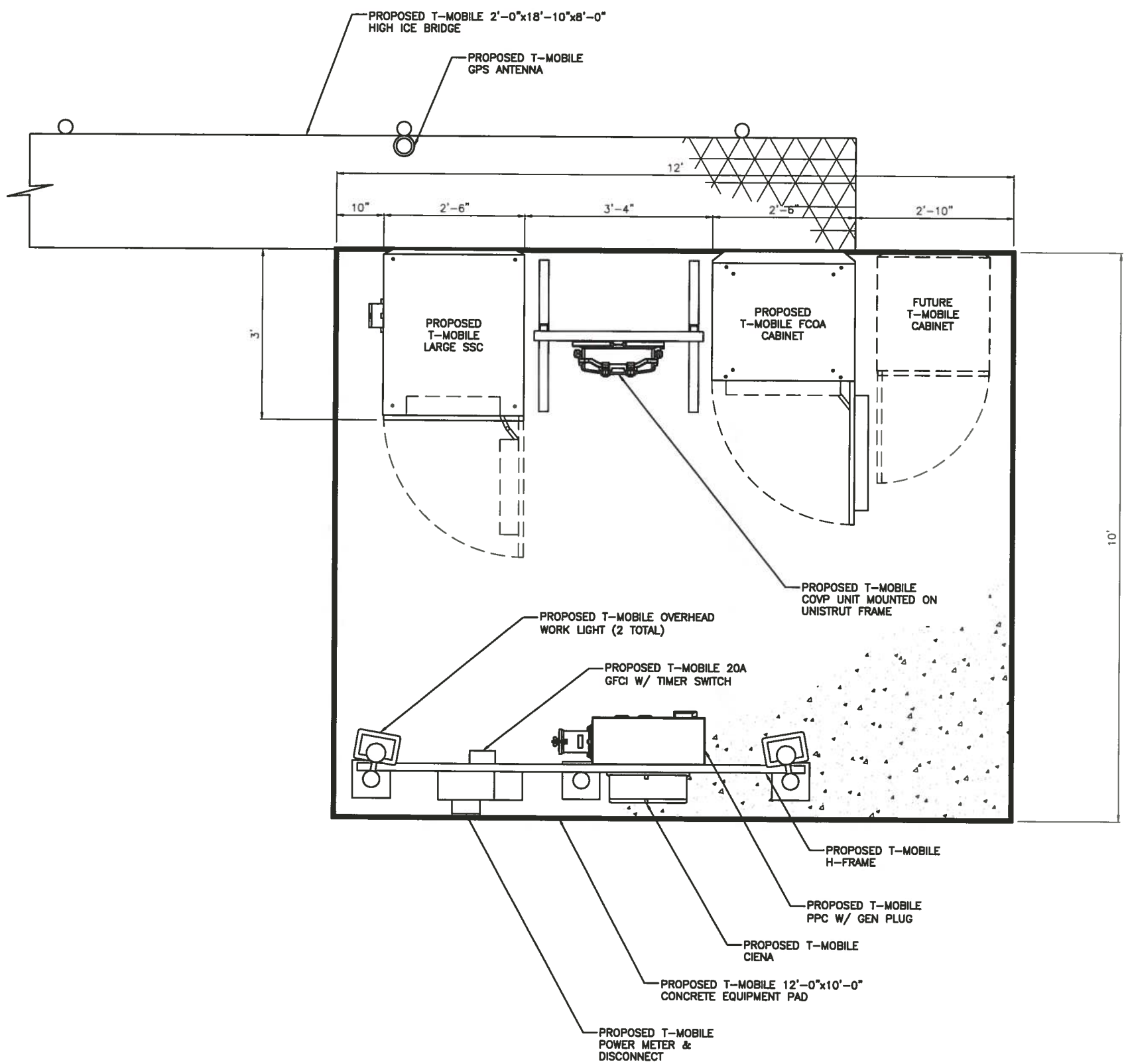

PROPOSED EQUIPMENT PLAN

1' 0 6" 1'

SCALE: 1" = 1'-0" (24x36)
(OR) 1/2" = 1'-0" (11x17)

1

T-Mobile

T-MOBILE WEST, LLC
2323 DELGANY STREET
DENVER, CO 80216

POWDER RIVER
Engineering Services, LLC
www.powderriverdev.com

LICENSE #: N/A

REVISIONS

REV	DATE	DESCRIPTION	INT
B	06/13/16	ISSUED FOR REVIEW 90%	JE
A	05/10/16	ISSUED FOR REVIEW 90%	JE

SITE INFORMATION

DN04163B
SW SPRINGS

2520 ARLINGTON DR.
COLORADO SPRINGS, CO
80910

SHEET TITLE:

PROPOSED EQUIPMENT PLAN

SHEET NUMBER:

C-4

CPC CM1 16-00070

FIGURE 1

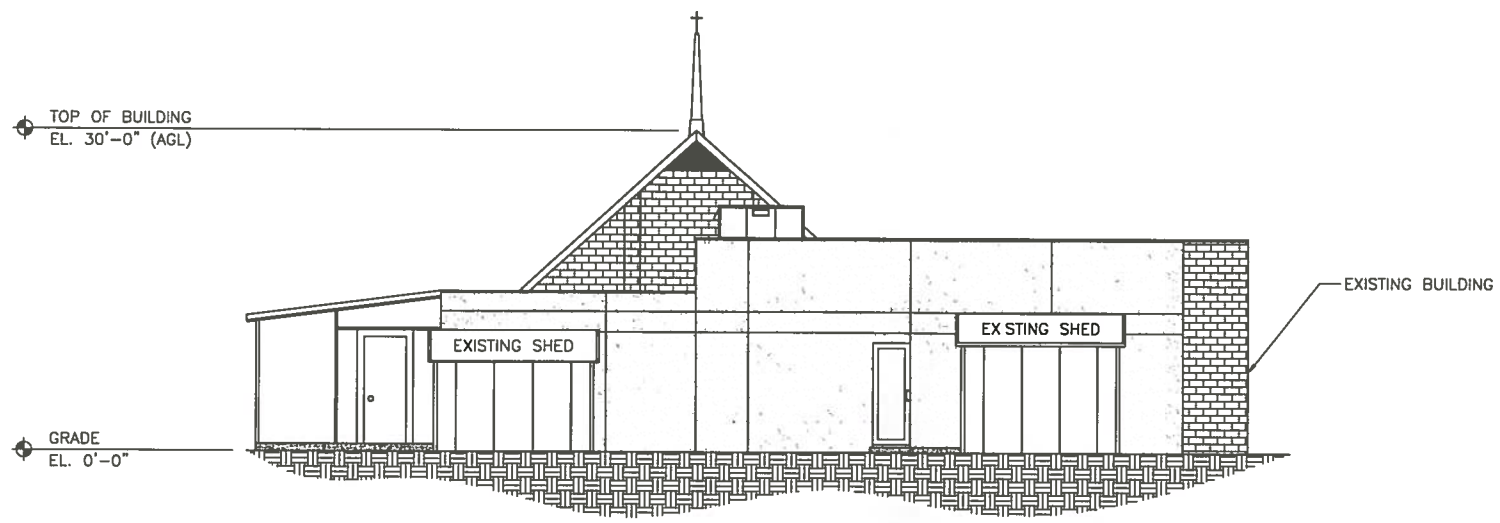

EXISTING NORTH ELEVATION

8' 0 4' 8'

SCALE: 1/8" = 1'-0" (24x36)
(OR) 1/16" = 1'-0" (11x17)

1

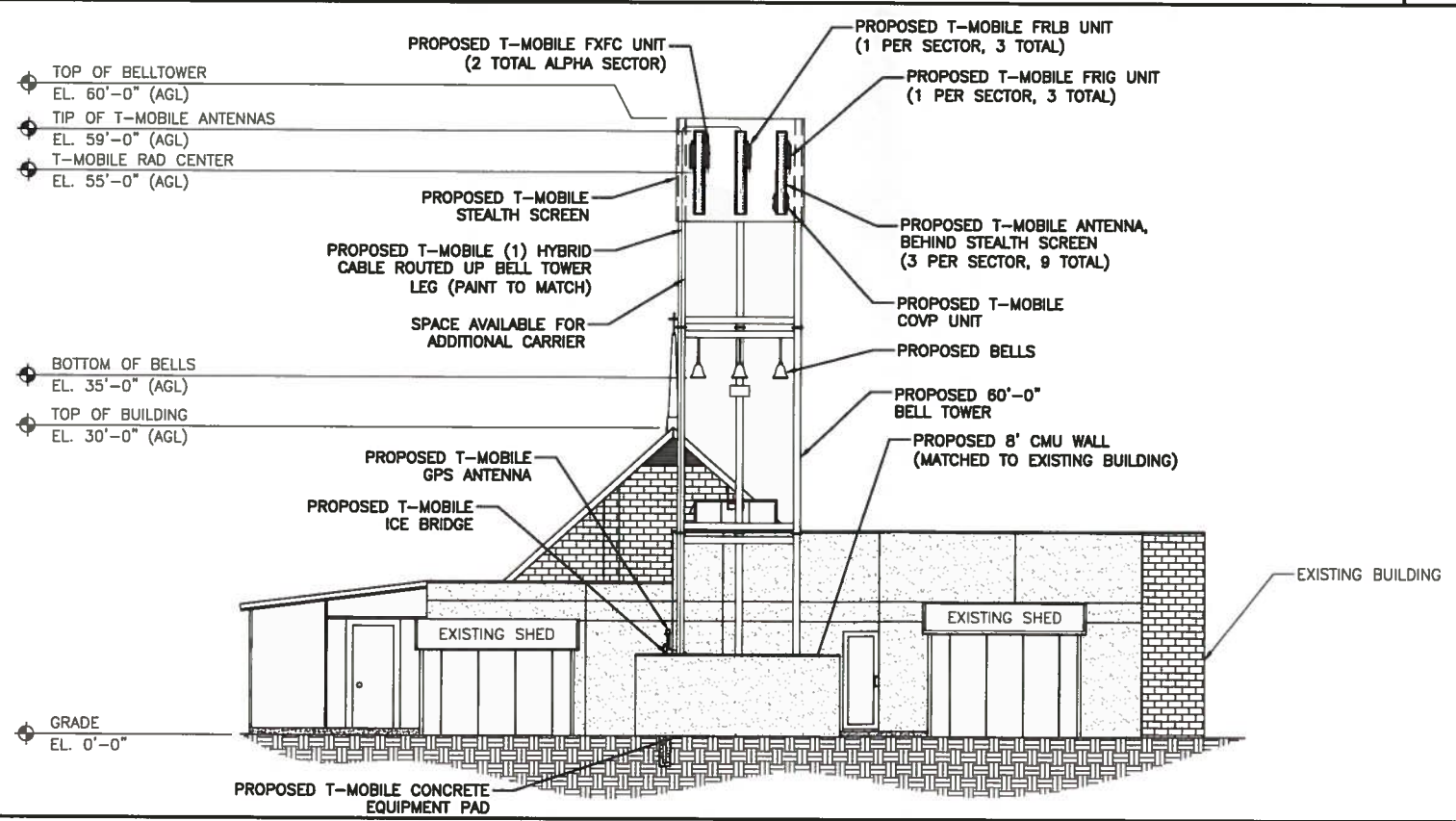

NOTE:

1. STRUCTURAL ANALYSIS MUST BE PERFORMED ON ALL ROOFTOPS, FLAGPOLES, LIGHT POLES, AND TOWER SITES BEFORE INSTALLATION OF NEW ANTENNAS, RADIO UNITS, ETC.

2. ALL PROPOSED EQUIPMENT TO BE PAINTED TO MATCH PROPOSED BELL TOWER.

PROPOSED NORTH ELEVATION

8' 0 4' 8'

SCALE 1/8" = 1'-0" (24x36)
(OR) 1/16" = 1'-0" (11x17)

2

T-Mobile

T-MOBILE WEST, LLC
2323 DELGANY STREET
DENVER, CO 80216

POWDER RIVER
Engineering Services, LLC
www.powderriverdev.com

LICENSE #: N/A

REVISIONS

REV	DATE	DESCRIPTION	INT
B	06/13/16	ISSUED FOR REVIEW 90%	JE
A	05/10/16	ISSUED FOR REVIEW 90%	JE

SITE INFORMATION

DN04163B
SW SPRINGS

2520 ARLINGTON DR.
COLORADO SPRINGS, CO
80910

SHEET TITLE:

TOWER ELEVATIONS

SHEET NUMBER:

C-5

CPC CM1 16-00070

FIGURE 1

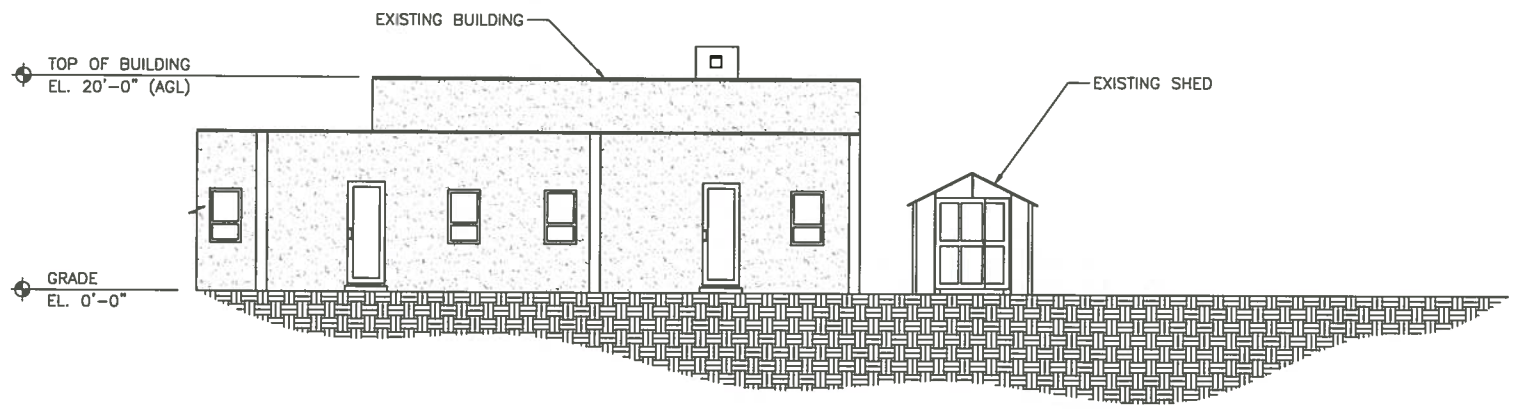

EXISTING EAST ELEVATION

8' 0 4' 8'

SCALE: 1/8" = 1'-0" (24x36)
(OR) 1/16" = 1'-0" (11x17)

1

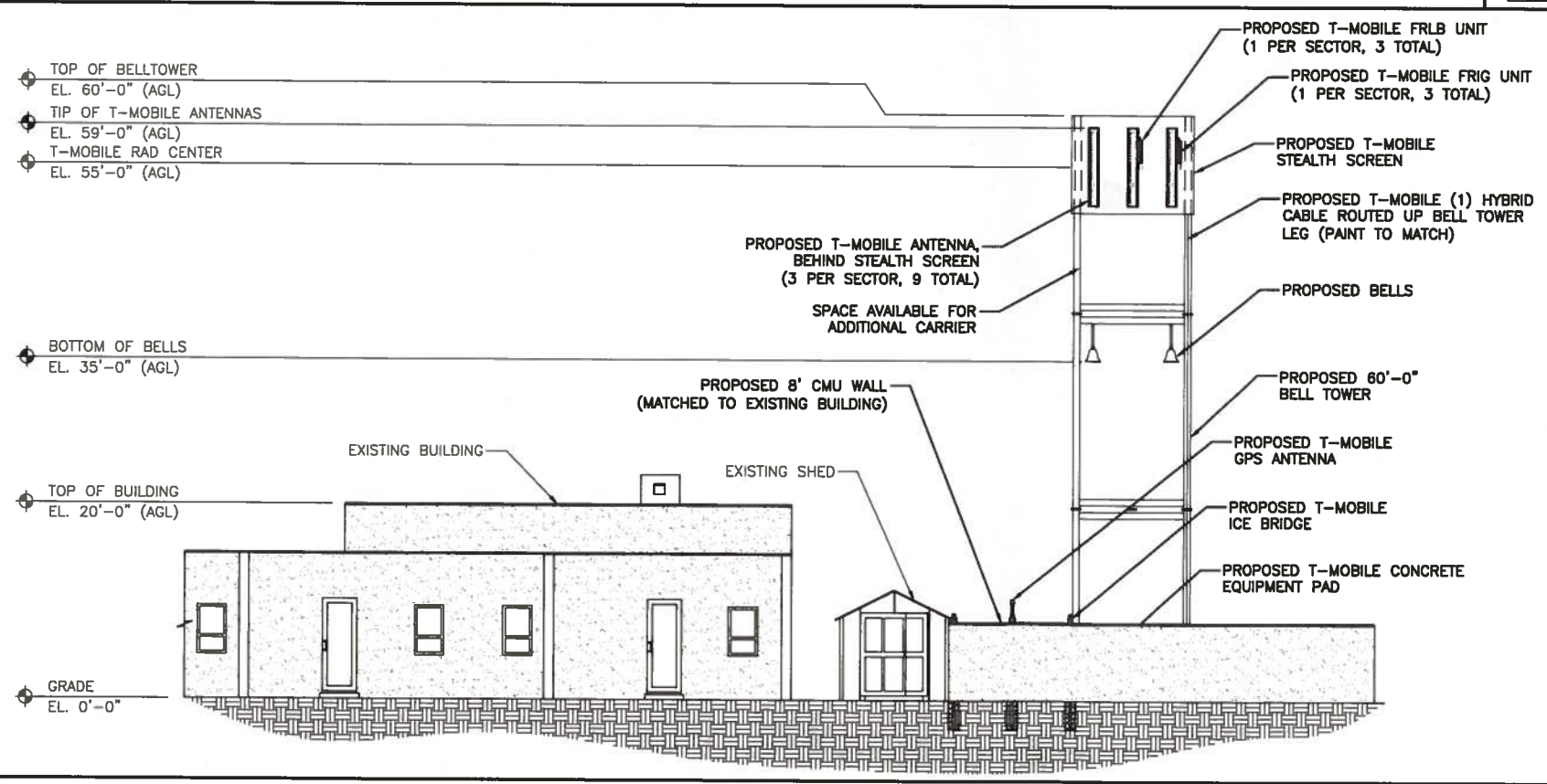

NOTE:

1. STRUCTURAL ANALYSIS MUST BE PERFORMED ON ALL ROOFTOPS, FLAGPOLES, LIGHT POLES, AND TOWER SITES BEFORE INSTALLATION OF NEW ANTENNAS, RADIO UNITS, ETC.

2. ALL PROPOSED EQUIPMENT TO BE PAINTED TO MATCH PROPOSED BELL TOWER.

PROPOSED EAST ELEVATION

8' 0 4' 8'

SCALE: 1/8" = 1'-0" (24x36)
(OR) 1/16" = 1'-0" (11x17)

2

T-Mobile

T-MOBILE WEST, LLC
2323 DELGANY STREET
DENVER, CO 80216

POWDER RIVER
Engineering Services, LLC
www.powderriverdev.com

LICENSE #: N/A

REVISIONS

REV	DATE	DESCRIPTION	INT
B	06/13/16	ISSUED FOR REVIEW 90%	JE
A	05/10/16	ISSUED FOR REVIEW 90%	JE

SITE INFORMATION

DN04163B
SW SPRINGS

2520 ARLINGTON DR.
COLORADO SPRINGS, CO
80910

SHEET TITLE:

TOWER ELEVATIONS

SHEET NUMBER:

C-6

CPC CM1 16-00070

FIGURE 1

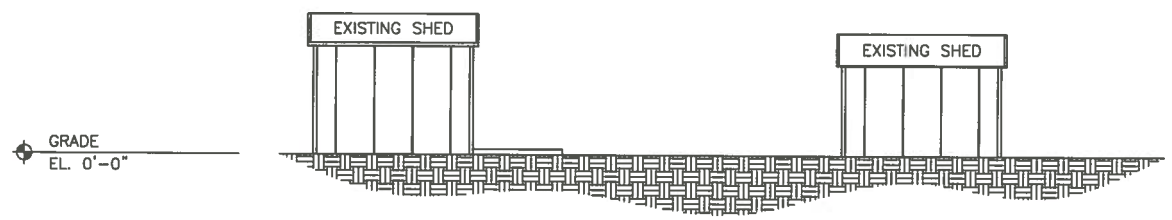

EXISTING SOUTH ELEVATION

8' 0 4' 8'

SCALE: 1/8" = 1'-0" (24x36)
(OR) 1/16" = 1'-0" (11x17)

1

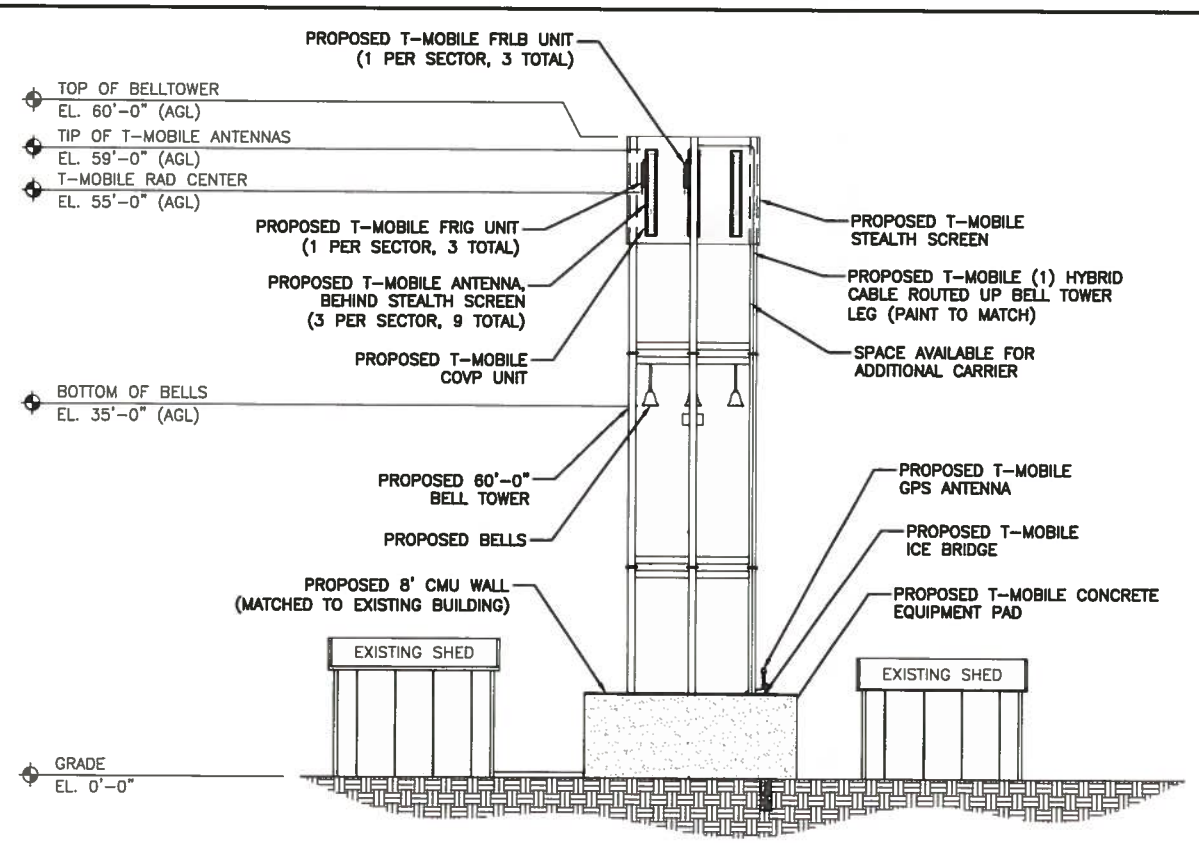

NOTE:

1. STRUCTURAL ANALYSIS MUST BE PERFORMED ON ALL ROOFTOPS, FLAGPOLES, LIGHT POLES, AND TOWER SITES BEFORE INSTALLATION OF NEW ANTENNAS, RADIO UNITS, ETC.

2. ALL PROPOSED EQUIPMENT TO BE PAINTED TO MATCH PROPOSED BELL TOWER.

PROPOSED SOUTH ELEVATION

8' 0 4' 8'

SCALE: 1/8" = 1'-0" (24x36)
(OR) 1/16" = 1'-0" (11x17)

2

FIGURE 1

T-Mobile

T-MOBILE WEST, LLC
2323 DELGANY STREET
DENVER, CO 80216

POWDER RIVER
Engineering Services, LLC
www.powderriverdev.com

LICENSE #: N/A

REVISIONS

REV	DATE	DESCRIPTION	INT
B	06/13/16	ISSUED FOR REVIEW 90%	JE
A	05/10/16	ISSUED FOR REVIEW 90%	JE

SITE INFORMATION

DN04163B
SW SPRINGS

2520 ARLINGTON DR.
COLORADO SPRINGS, CO
80910

SHEET TITLE:

TOWER ELEVATIONS

SHEET NUMBER:

C-7

CPC CM1 16-00070

T-MOBILE WEST, LLC
2323 DELGANY STREET
DENVER, CO 80216

POWDER RIVER
Engineering Services, LLC
www.powderriverdev.com

LICENSE #: N/A

REVISIONS

REV	DATE	DESCRIPTION	INT
B	06/13/16	ISSUED FOR REVIEW 90%	JE
A	05/10/16	ISSUED FOR REVIEW 90%	JE

SITE INFORMATION

DN04163B
SW SPRINGS

2520 ARLINGTON DR.
COLORADO SPRINGS, CO
80910

SHEET TITLE:
TOWER ELEVATIONS

SHEET NUMBER:
C-8
CPC CM1 16-00070

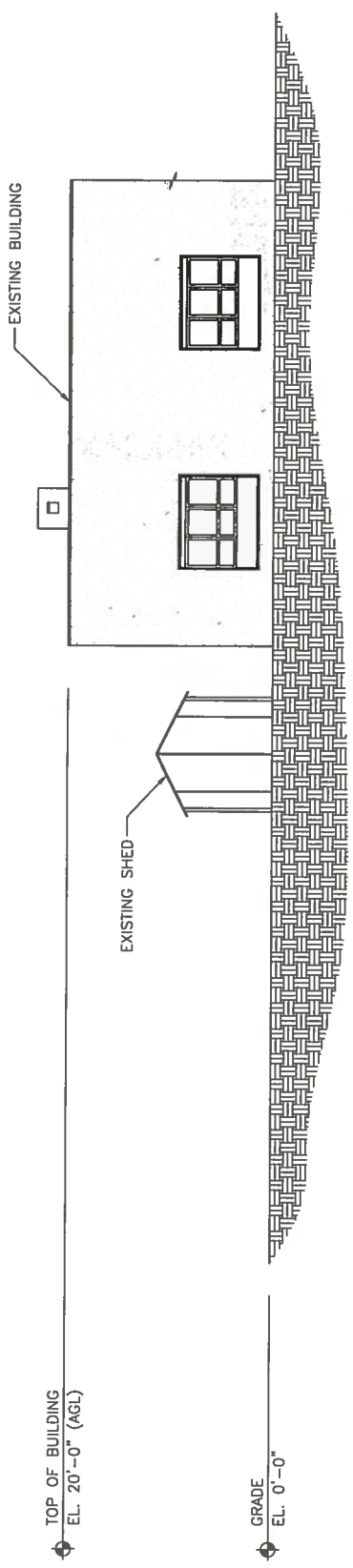

8' 0 4' 8'
SCALE: 1/8" = 1'-0" (24x36)
(OR) 1/16" = 1'-0" (11x17)
1

EXISTING WEST ELEVATION

NOTE:

1. STRUCTURAL ANALYSIS MUST BE PERFORMED ON ALL ROOFTOPS, FLAGPOLES, LIGHT POLES, AND TOWER SITES BEFORE INSTALLATION OF NEW ANTENNAS, RADIO UNITS, ETC.

2. ALL PROPOSED EQUIPMENT TO BE PAINTED TO MATCH PROPOSED BELL TOWER.

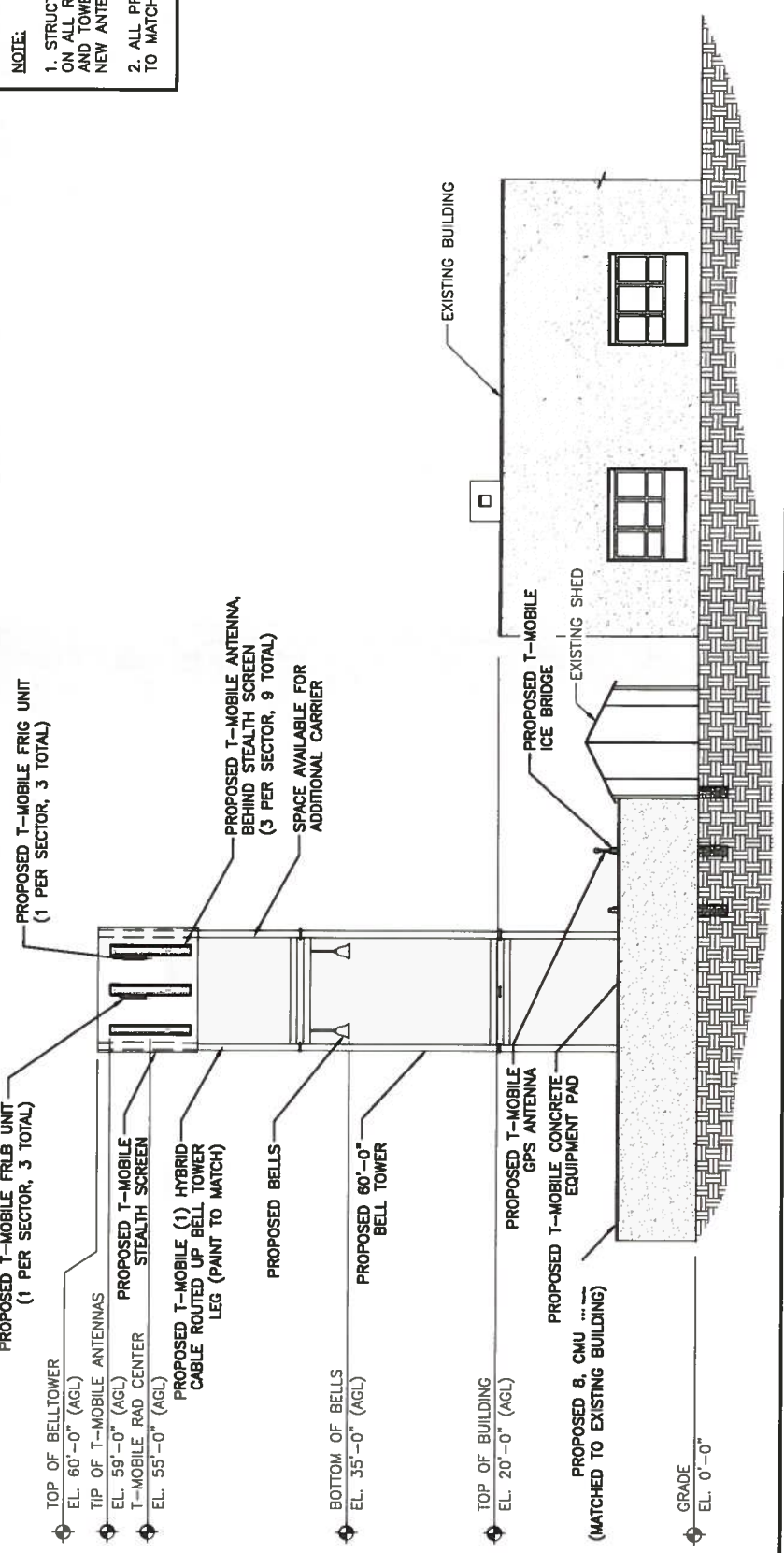

8' 0 4' 8'
SCALE: 1/8" = 1'-0" (24x36)
(OR) 1/16" = 1'-0" (11x17)
2

PROPOSED WEST ELEVATION

FIGURE 1

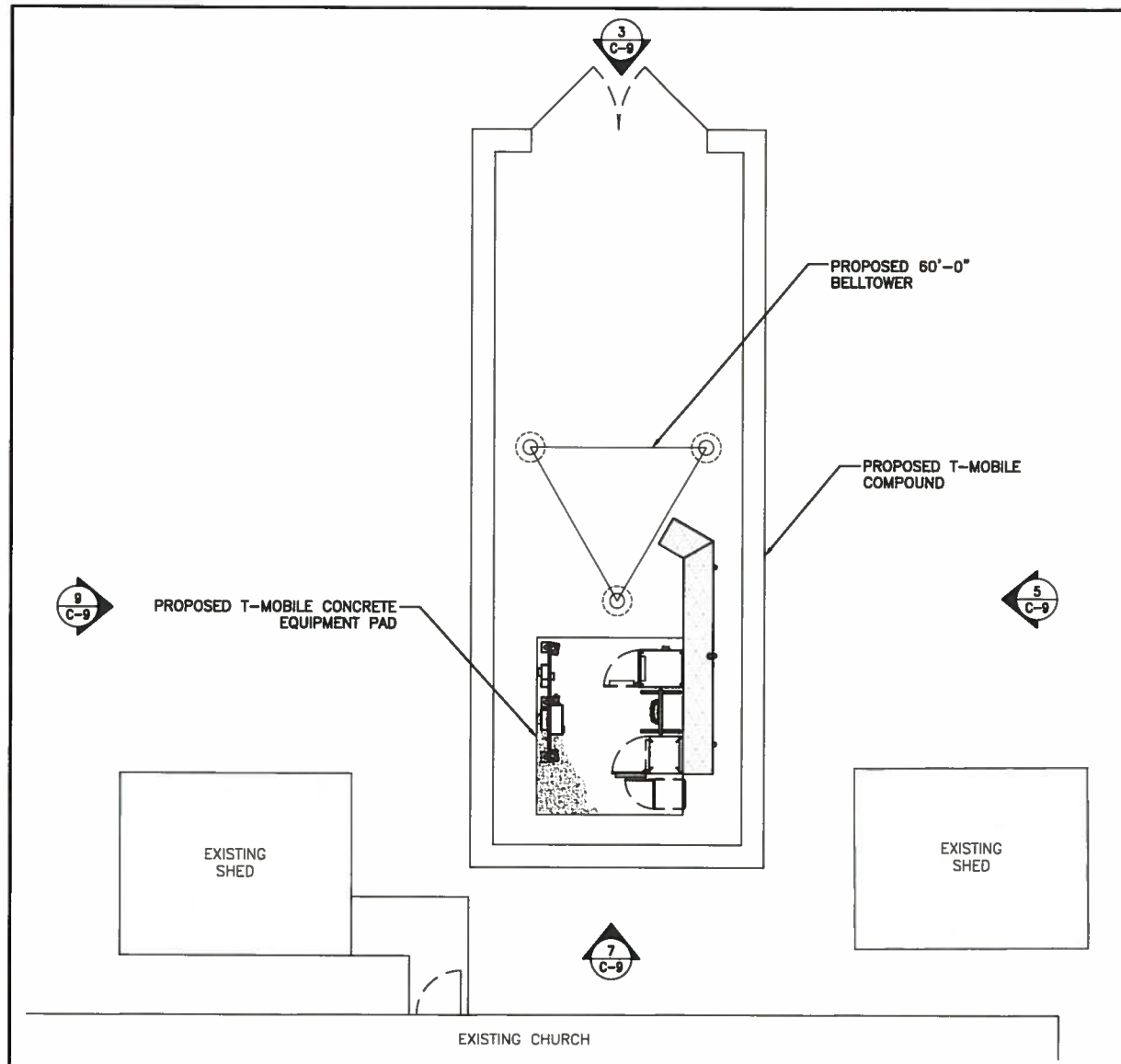

PLAN VIEW | SCALE: NTS | 1

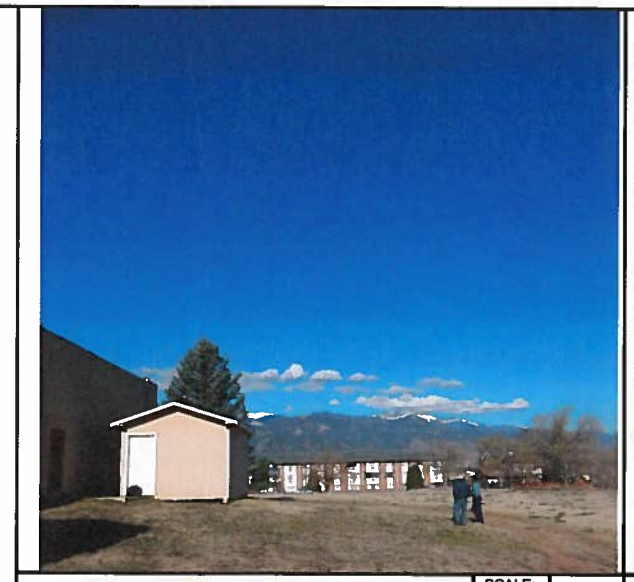

EXISTING EAST ELEVATION | SCALE: NTS | 4

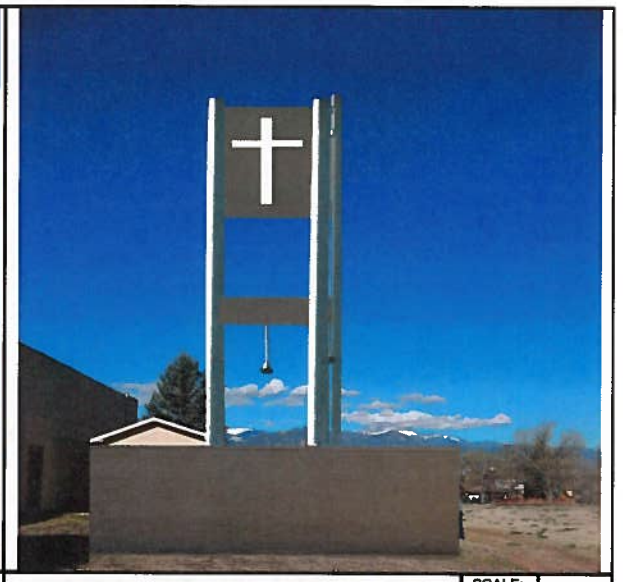

PROPOSED EAST ELEVATION | SCALE: NTS | 5

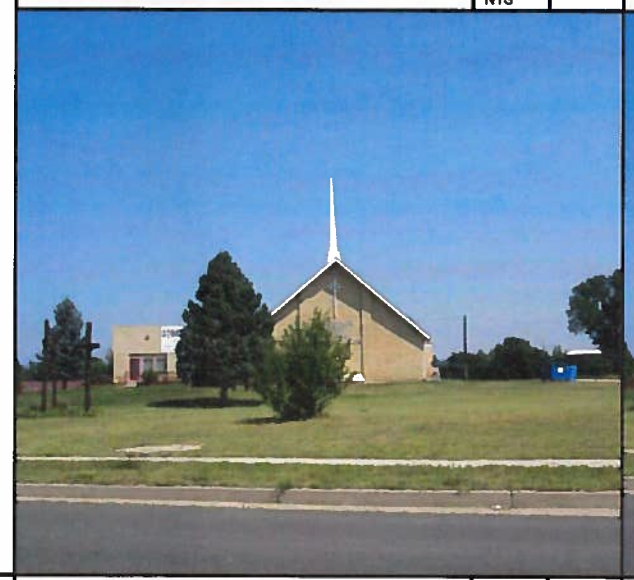

EXISTING SOUTH ELEVATION | SCALE: NTS | 6

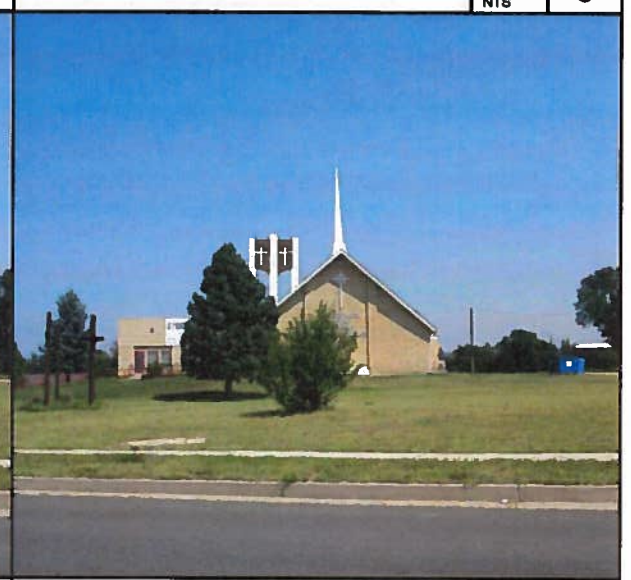

PROPOSED SOUTH ELEVATION | SCALE: NTS | 7

EXISTING NORTH ELEVATION | SCALE: NTS | 2

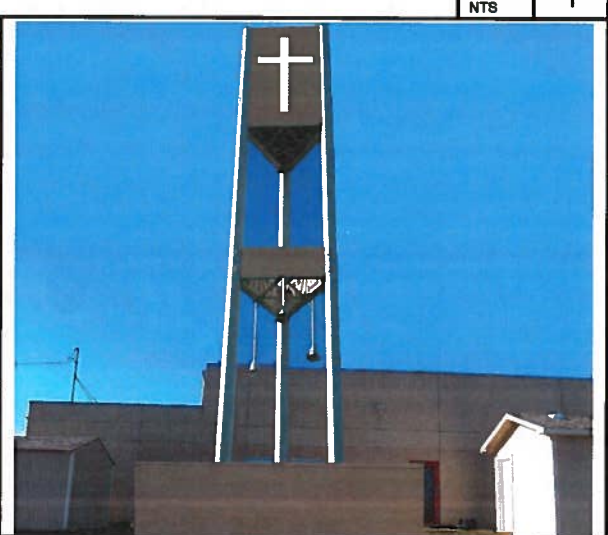

PROPOSED NORTH ELEVATION | SCALE: NTS | 3

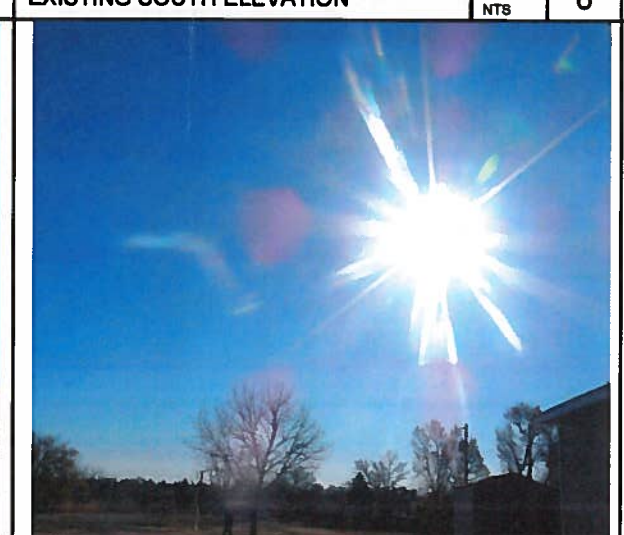

EXISTING WEST ELEVATION | SCALE: NTS | 8

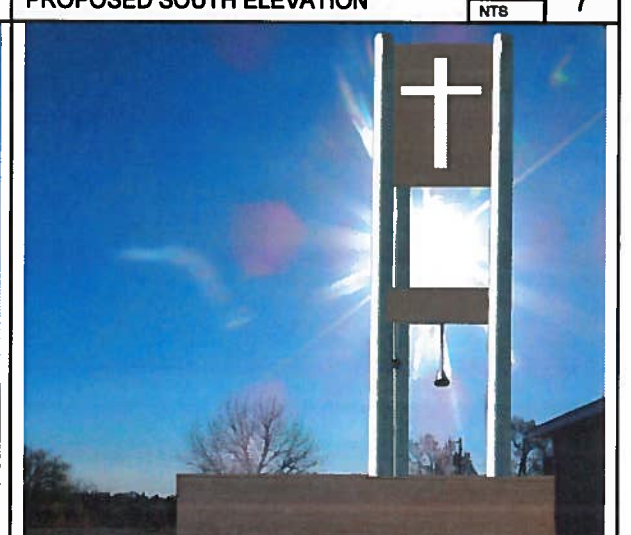

PROPOSED WEST ELEVATION | SCALE: NTS | 9

T-Mobile

T-MOBILE WEST, LLC
2323 DELGANY STREET
DENVER, CO 80216

POWDER RIVER
Engineering Services, LLC
www.powderriverdev.com

LICENSE #: N/A

REVISIONS

REV	DATE	DESCRIPTION	INT
B	06/13/16	ISSUED FOR REVIEW 90%	JE
A	05/10/16	ISSUED FOR REVIEW 90%	JE

SITE INFORMATION

DN04163B
SW SPRINGS

2520 ARLINGTON DR.
COLORADO SPRINGS, CO
80910

SHEET TITLE:

PHOTOSIMS

SHEET NUMBER:

C-9

CPC CM1 16-00070

FIGURE 1

NOTE:

1. STRUCTURAL ANALYSIS MUST BE PERFORMED ON ALL ROOFTOPS, FLAGPOLES, LIGHT POLES, AND TOWER SITES BEFORE INSTALLATION OF NEW ANTENNAS, RADIO UNITS, ETC.

2. ALL PROPOSED EQUIPMENT TO BE PAINTED TO MATCH PROPOSED BELL TOWER.

SECTOR	POS.	TECHNOLOGY	ANTENNA			MECH. TILT	ELECT. TILT
			AZM.	C.L.	MANUFACTURER – MODEL #		
ALPHA	A1	LTE 2100	0°	55'-0"	ANDREW – TMBXX-6517-A2M	0°	1°
	A2	LTE 700			ANDREW – LNX-6515DS-A1M	0°	4°
	A3	UMTS 1900			ANDREW – TMBXX-6517-A2M	0°	1°
BETA	B1	LTE 2100	120°	55'-0"	ANDREW – TMBXX-6517-A2M	0°	4°
	B2	LTE 700			ANDREW – LNX-6515DS-A1M	0°	3°
	B3	UMTS 1900			ANDREW – TMBXX-6517-A2M	0°	4°
GAMMA	C1	LTE 2100	240°	55'-0"	ANDREW – TMBXX-6517-A2M	0°	5°
	C2	LTE 700			ANDREW – LNX-6515DS-A1M	0°	4°
	C3	UMTS 1900			ANDREW – TMBXX-6517-A2M	0°	5°

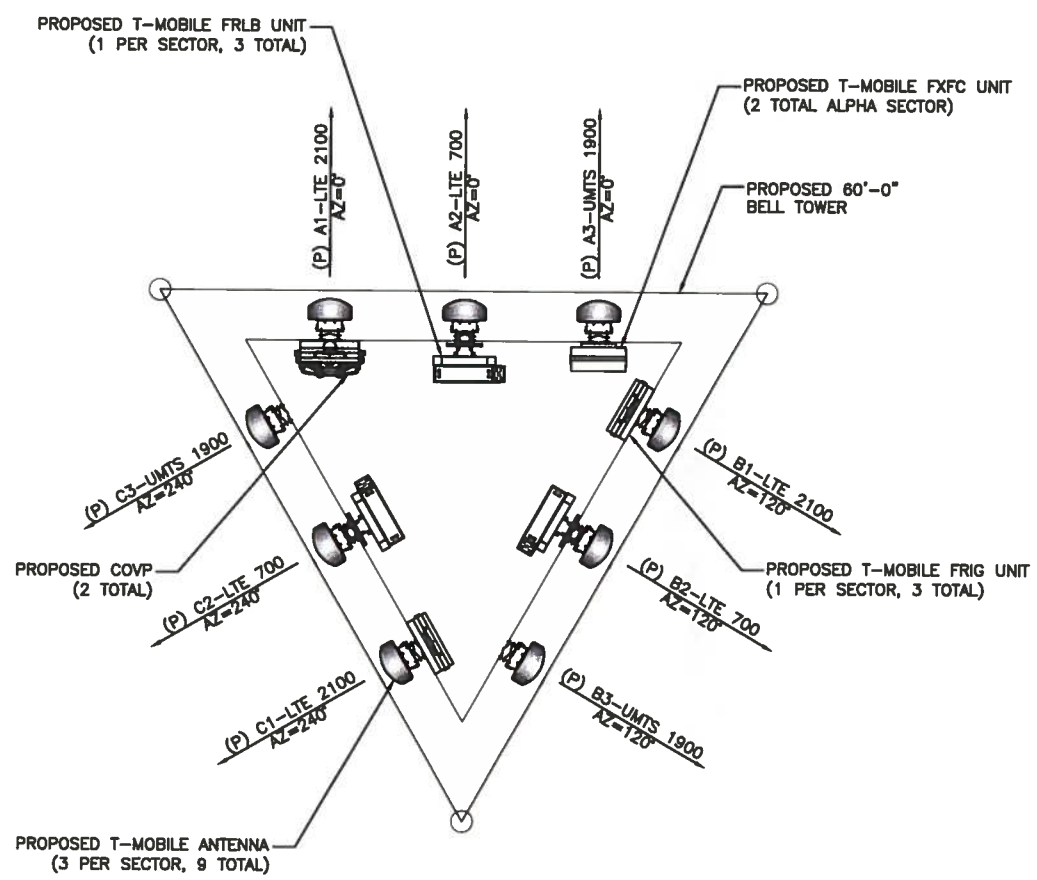

PROPOSED ANTENNA PLAN

SCALE NTS 1

T-Mobile

T-MOBILE WEST, LLC
2323 DELGANY STREET
DENVER, CO 80216

POWDER RIVER
Engineering Services, LLC
www.powderriverdev.com

LICENSE #: N/A

REVISIONS

REV	DATE	DESCRIPTION	INT
B	06/13/16	ISSUED FOR REVIEW 90%	JE
A	05/10/16	ISSUED FOR REVIEW 90%	JE

SITE INFORMATION

DN04163B
SW SPRINGS

2520 ARLINGTON DR.
COLORADO SPRINGS, CO
80910

SHEET TITLE:

PROPOSED ANTENNA PLAN

SHEET NUMBER:

C-10

CPC CM1 16-00070

FIGURE 1

RAN Template:	A&L Template:
701G Rxx	701G_RUN

DN04163B_ 1_Infill/ROB/Greenfield

Section 1 - Site Information

Site ID: DN04163B
Status: Initial
Version: 1
Project Type: Infill/ROB/Greenfield
Last Modified: 2/26/2016 2:05:54 PM
Last Modified By: GSM1900\RCarist2

Site Class: 3G Repeater
Site Type: Structure Non Buildi
Solution Type:
Plan Year:
Market: Denver CO
Vendor: NSN

Latitude: 38.80914445
Longitude: -104.77890001
Address: 2520 Arlington Dr
City, State: Colorado Springs, CO
Region: Central

RAN Template:	AL Template:
701G Rxx	701G_RUN

Sector Count:	Antenna Count:	Line Count:	TMA Count:	RRU Count:
3	9	0	0	8

RAN Template:	A&L Template:
701G Rxx	701G_RUN

DN04163B_ 1_Infill/ROB/Greenfield

Section 5 - RAN Equipment

Existing RAN Equipment

---- This section is intentionally blank. ----

Proposed RAN Equipment

Template: 701G Rxx

Enclosure	1	2	3	4
Enclosure Type	Generic Cabinet	Tower Top Mount	Ancillary Equipment	Generic Site Support Cabinet
Baseband	FSMF L2100 L700; FSMF U1900			
Hybrid Cable System			NSN Low Cap HCS *Select Length*	
Junction Box		Large COVP	Large COVP	
Power subsystem				Rectifier Shelf *Select size*; CSR 7705 *Select model*; Breakers *Select size*; Batteries *Select size*
Radio		FXFC (x2) U1900; FRLB (x3) L700; FRIG (x3) L2100		

Section 3 - Proposed Template Images

Configuration 701G RUN.jpg

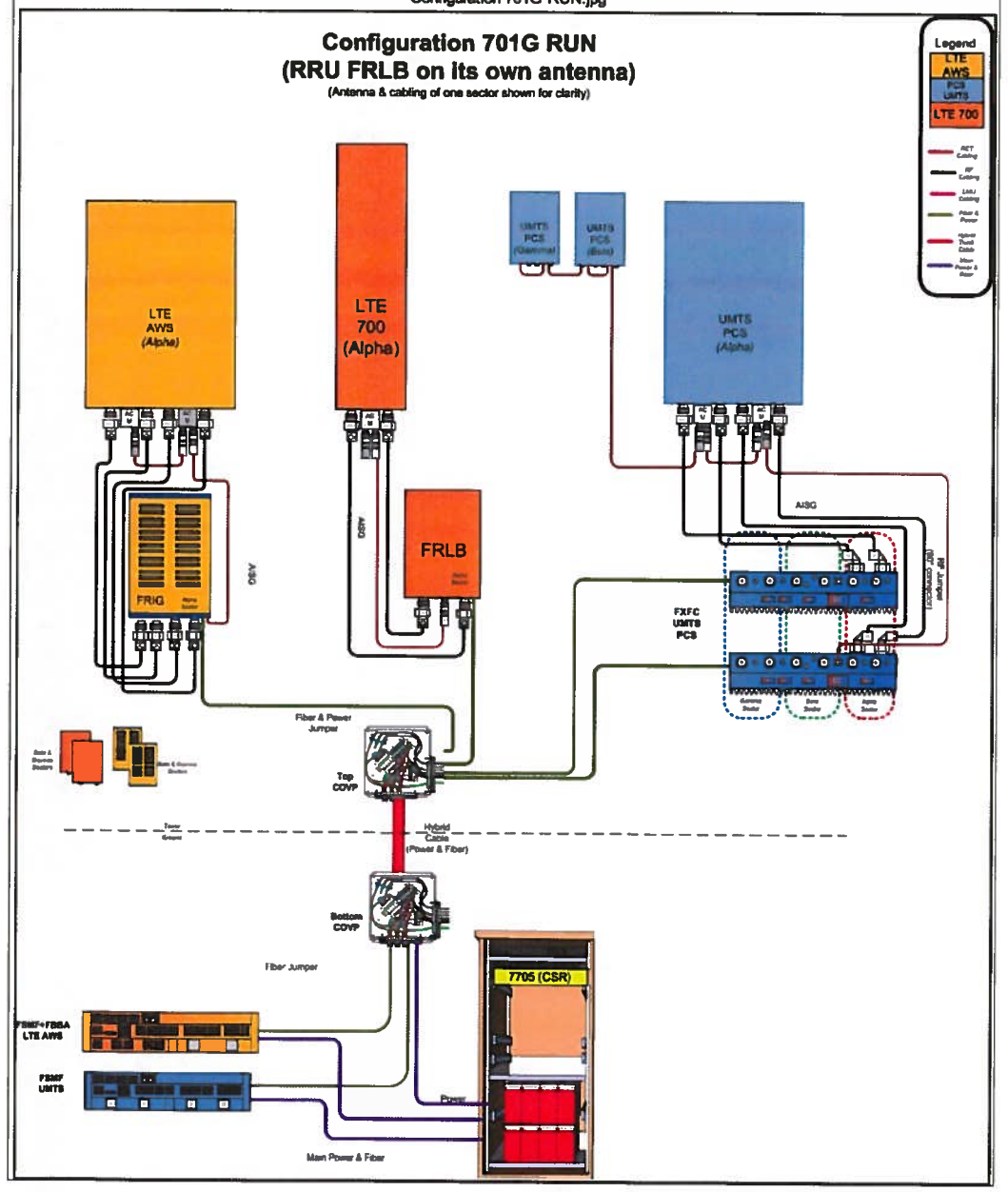

RFDS DATA CONFIGURATION SHEET

SCALE:	
NTS	1

T-Mobile

T-MOBILE WEST, LLC
2323 DELGANY STREET
DENVER, CO 80216

POWDER RIVER
Engineering Services, LLC
www.powderriverdev.com

LICENSE #: N/A

REVISIONS

REV	DATE	DESCRIPTION	INT
B	06/13/16	ISSUED FOR REVIEW 90%	JE
A	05/10/16	ISSUED FOR REVIEW 90%	JE

SITE INFORMATION

DN04163B
SW SPRINGS

2520 ARLINGTON DR.
COLORADO SPRINGS, CO
80910

SHEET TITLE:
RFDS DATA CONFIG. SHEET

SHEET NUMBER:
C-11
CPC CM1 16-00070

FIGURE 1

RAN Template: 701G Rxx	A&L Template: 701G_RUN

DN04163B_ 1_Infill/ROB/Greenfield

Section 6 - A&L Equipment

Existing Template: Custom
Proposed Template: 701G_RUN

Sector 1 (Proposed) view from front (Note: the images show view from behind)

Coverage Type	A - Outdoor Macro				
Antenna	1		2	3	
Antenna Model	TMBXX-6517-A2M (Quad)		LNX-6515DS-A1M (Dual)	TMBXX-6517-A2M (Quad)	
Azimuth	0		0	0	
M. Tilt	0		0	0	
Height	55		55	55	
Ports	P1	P2	P3	P4	P5
Tech.	L2100	L2100	L700	U1900	U1900
E. Tilt	1	1	4	1	1
Cables					
TMAs					
Diplexers / Combiners					
Radio					
Sector Equipment					

RAN Template: 701G Rxx	A&L Template: 701G_RUN

DN04163B_ 1_Infill/ROB/Greenfield

Sector 2 (Proposed) view from front (Note: the images show view from behind)

Coverage Type	A - Outdoor Macro				
Antenna	1		2	3	
Antenna Model	TMBXX-6517-A2M (Quad)		LNX-6515DS-A1M (Dual)	TMBXX-6517-A2M (Quad)	
Azimuth	120		120	120	
M. Tilt	0		0	0	
Height	55		55	55	
Ports	P1	P2	P3	P4	P5
Tech.	L2100	L2100	L700	U1900	U1900
E. Tilt	4	4	3	4	4
Cables					
TMAs					
Diplexers / Combiners					
Radio					
Sector Equipment					

RAN Template: 701G Rxx	A&L Template: 701G_RUN

DN04163B_ 1_Infill/ROB/Greenfield

Sector 3 (Proposed) view from front (Note: the images show view from behind)

Coverage Type	A - Outdoor Macro				
Antenna	1		2	3	
Antenna Model	TMBXX-6517-A2M (Quad)		LNX-6515DS-A1M (Dual)	TMBXX-6517-A2M (Quad)	
Azimuth	240		240	240	
M. Tilt	0		0	0	
Height	55		55	55	
Ports	P1	P2	P3	P4	P5
Tech.	L2100	L2100	L700	U1900	U1900
E. Tilt	5	5	4	5	5
Cables					
TMAs					
Diplexers / Combiners					
Radio					
Sector Equipment					

Unconnected Equipment:

Scope of Work:

RFDS DATA CONFIGURATION SHEET

SCALE	
NTS	1

T-Mobile

T-MOBILE WEST, LLC
2323 DELGANY STREET
DENVER, CO 80216

POWDER RIVER
Engineering Services, LLC
www.powderriverdev.com

LICENSE #: N/A

REVISIONS

REV	DATE	DESCRIPTION	INT
B	06/13/16	ISSUED FOR REVIEW 90%	JE
A	05/10/16	ISSUED FOR REVIEW 90%	JE

SITE INFORMATION

DN04163B
SW SPRINGS

2520 ARLINGTON DR.
COLORADO SPRINGS, CO
80910

SHEET TITLE:
RFDS DATA CONFIG. SHEET

SHEET NUMBER:
C-12
CPC CM1 16-00070

FIGURE 1

ANTENNA KEY AND HYBRID CABLE SCHEDULE

ANTENNA MARK	MARK	STATUS	TECH	ANTENNA MODEL	ANTENNA MFG.	PROPOSED AZIMUTH	MECHANICAL DOWNTILT	ELECTRICAL DOWNTILT	RADIATION CENTER	SECTOR	CONNECTOR	ANTENNA DIMENSIONS (HxWxD)	TOTAL WEIGHT	HYBRID CABLE MFG.	HYBRID CABLE SIZE	HYBRID CABLE LENGTH	FINAL HYBRID CABLE COUNT
A1	A	PROPOSED	LTE 2100	TMBXX 6517-A2M	ANDREW	0°	0°	1°	55'-0"	Tx1/Rx	7/16" DIN	82.9"x6.6"x3.3"	55.0 LBS.	NSN	1.24" (O.D.)	75'	1
A2	A	PROPOSED	LTE 700	LNX-6515DS-A1M	ANDREW	0°	0°	4°	55'-0"	Tx1/Rx	7/16" DIN	96.4"x11.9"x7.1"	49.8 LBS.	SHARED	SHARED	SHARED	SHARED
A3	A	PROPOSED	UMTS 1900	TMBXX 6517-A2M	ANDREW	0°	0°	1°	55'-0"	Tx1/Rx	7/16" DIN	82.9"x6.6"x3.3"	55.0 LBS.	SHARED	SHARED	SHARED	SHARED
B1	B	PROPOSED	LTE 2100	TMBXX 6517-A2M	ANDREW	120°	0°	4°	55'-0"	Tx1/Rx	7/16" DIN	82.9"x6.6"x3.3"	55.0 LBS.	SHARED	SHARED	SHARED	SHARED
B2	B	PROPOSED	LTE 700	LNX-6515DS-A1M	ANDREW	120°	0°	3°	55'-0"	Tx1/Rx	7/16" DIN	96.4"x11.9"x7.1"	49.8 LBS.	SHARED	SHARED	SHARED	SHARED
B3	B	PROPOSED	UMTS 1900	TMBXX 6517-A2M	ANDREW	120°	0°	4°	55'-0"	Tx1/Rx	7/16" DIN	82.9"x6.6"x3.3"	55.0 LBS.	SHARED	SHARED	SHARED	SHARED
C1	C	PROPOSED	LTE 2100	TMBXX 6517-A2M	ANDREW	240°	0°	5°	55'-0"	Tx1/Rx	7/16" DIN	82.9"x6.6"x3.3"	55.0 LBS.	SHARED	SHARED	SHARED	SHARED
C2	C	PROPOSED	LTE 700	LNX-6515DS-A1M	ANDREW	240°	0°	4°	55'-0"	Tx1/Rx	7/16" DIN	96.4"x11.9"x7.1"	49.8 LBS.	SHARED	SHARED	SHARED	SHARED
C3	C	PROPOSED	UMTS 1900	TMBXX 6517-A2M	ANDREW	240°	0°	5°	55'-0"	Tx1/Rx	7/16" DIN	82.9"x6.6"x3.3"	55.0 LBS.	SHARED	SHARED	SHARED	SHARED

TMA AND OVP SCHEDULE

EQUIPMENT	STATUS	PART NUMBER	VENDOR	QTY PER SECTOR	DIMENSIONS (HxWxD)	WEIGHT	TOTAL
FSMF UMTS	PROPOSED	FSMF UMTS	NOKIA	SHARED	5.25"x17.5"x22"	33 LBS.	1 AT EQUIPMENT LEVEL
FSMF LTE	PROPOSED	FSMF+FBBA LTE AWS	NOKIA	SHARED	5.25"x17.5"x22"	33 LBS.	1 AT EQUIPMENT LEVEL
COVP	PROPOSED	COVP	NOKIA	SHARED	20.38"x18.86"x5.83"	19 LBS.	1 AT EQUIPMENT LEVEL
FRIG	PROPOSED	FRIG	NOKIA	1	30.0"x17.2"x7.6"	57 LBS.	3 AT ANTENNA LEVEL
FRLB	PROPOSED	FRLB	NOKIA	1	19.3"x22"x5.25"	11 LBS.	3 AT ANTENNA LEVEL
FXFC	PROPOSED	FXFC	NOKIA	SHARED	19.3"x22"x5.25"	13 LBS.	2 AT ANTENNA LEVEL/ALPHA
COVP	PROPOSED	COVP	NOKIA	SHARED	20.38"x18.86"x5.83"	19 LBS.	1 AT ANTENNA LEVEL

COAX BEND TABLE

TYPICAL CABLE SIZES	ANDREW CABLE TYPE NUMBER	MANUFACTURE'S MINIMUM BEND RADIUS	HANGER ANDREW CATALOG NUMBER	CABLE TO CABLE CLEAR SPACING	MAXIMUM VERTICAL HANGER SPACING	MAXIMUM HORIZONTAL HANGER SPACING
1/2"	LDF4-50A	5"	206706-1	1/2"	4'-0"	4'-0"
7/8"	LDF5-50A	10"	206706-2	1/2"	4'-0"	4'-0"
7/8"	AVA5-50	10"	206706-2	1/2"	4'-0"	4'-0"
1-1/4"	LDF6-50A	15"	206706-3	1/2"	4'-0"	4'-0"
1-5/8"	LDF7-50A	20"	206706-4	1/2"	4'-0"	4'-0"
1-5/8"	AVA7-50A	20"	206706-4	1/2"	4'-0"	4'-0"
1/2"	FSJ4-50B	1-1/4"	206706-1	1/2"	4'-0"	4'-0"

ANTENNA NOTES

1. ANTENNA CONTRACTOR SHALL INSURE THAT ALL ANTENNA MOUNTING PIPES ARE PLUMB.
2. COAXIAL FEEDER & FIBER LENGTHS INDICATED ARE APPROXIMATE.
3. ANTENNA COAXIAL FEEDERS & ANTENNA JUMPERS SHALL BE COLOR CODED PER T-MOBILE REQUIREMENTS.
4. LINES 5 & 6 TO HAVE TMA MOUNTED ON PIPE BEHIND ANTENNA.
5. MULTI PORT ANTENNAS: TERMINATE UNUSED ANTENNA PORTS WITH CONNECTOR CAP & WEATHERPROOF THOROUGHLY. JUMPERS FROM TMA'S MUST TERMINATE TO OPPOSITE POLARIZATIONS IN EACH SECTOR.
6. CONTRACTOR MUST FOLLOW ALL MANUFACTURER'S RECOMMENDATIONS REGARDING THE INSTALLATION OF COAXIAL CABLES, CONNECTORS, AND ANTENNAS.
7. MINIMUM BEND RADIUS:
   LDF4-50A (1/2" HARD LINE) = 5"
   FSJ4-50B (1/2" SUPER FLEX) = 1-1/4"
   AVA5-50A (7/8" HARD LINE) = 10"
   AVA7-50A (1-5/8" HARD LINE) = 15"
   LDF7-50A (1-5/8" HARD LINE) = 20"
8. CONTRACTOR SHALL RECORD THE SERIAL #, SECTOR, AND POSITION OF EACH ACTUATOR INSTALLED AT THE ANTENNAS AND FURNISH THE INFORMATION TO T-MOBILE.
9. WEATHERPROOF ALL ANTENNA CONNECTORS WITH SELF AMALGAMATING TAPE.
10. ANTENNA CONTRACTOR SHALL PERFORM A "TAPE DROP" MEASUREMENT TO CONFIRM/VALIDATE ANTENNA CENTER LINE (ACL) HEIGHT. CONTRACTOR SHALL SUBMIT A COMPLETED HEIGHT VERIFICATION FORM TO THE CONSTRUCTION MANAGER.
11. ALL FIBER RUNS TO BE CONTAINED IN ONE COMMSCOPE HYBRID DC-FIBER CABLE FROM LOWER OVP TO UPPER OVP MODEL #RFF-12MM-606-218-SPE (COLOR CODE COAX JUMPERS ONLY).

ANTENNA/FEEDER CABLE COLOR CODING CONVENTION

SECTOR	COLOR	ANTENNA	REFERENCE	FUNCTION
A	1 RED	A1	MAIN LTE	Tx1/Rx LTE MAIN
	2 RED	A1	SECONDARY LTE	Tx3/Rx LTE DIVERSITY
	3 RED	A1	MAIN LTE	Tx1/Rx LTE MAIN
	4 RED	A1	SECONDARY LTE	Tx3/Rx LTE DIVERSITY
	5 RED	A2	MAIN AWS/PCS	Tx1/Rx AWS/PCS MAIN
	6 RED	A2	SECONDARY AWS/PCS	Tx3/Rx AWS/PCS DIVERSITY
	7 RED	A3	MAIN GSM/UMTS	Tx1/Rx GSM MAIN
	8 RED	A3	SECONDARY GSM/UMTS	Tx3/Rx GSM DIVERSITY
	9 RED	A3	MAIN GSM/UMTS	Tx1/Rx GSM MAIN
	10 RED	A3	SECONDARY GSM/UMTS	Tx3/Rx GSM DIVERSITY
B	1 BLUE	B1	MAIN LTE	Tx1/Rx LTE MAIN
	2 BLUE	B1	SECONDARY LTE	Tx3/Rx LTE DIVERSITY
	3 BLUE	B1	MAIN LTE	Tx1/Rx LTE MAIN
	4 BLUE	B1	SECONDARY LTE	Tx3/Rx LTE DIVERSITY
	5 BLUE	B2	MAIN AWS/PCS	Tx1/Rx AWS/PCS MAIN
	6 BLUE	B2	SECONDARY AWS/PCS	Tx3/Rx AWS/PCS DIVERSITY
	7 BLUE	B3	MAIN GSM/UMTS	Tx1/Rx GSM MAIN
	8 BLUE	B3	SECONDARY GSM/UMTS	Tx3/Rx GSM DIVERSITY
	9 BLUE	B3	MAIN GSM/UMTS	Tx1/Rx GSM MAIN
	10 BLUE	B3	SECONDARY GSM/UMTS	Tx3/Rx GSM DIVERSITY
C	1 WHITE	C1	MAIN LTE	Tx1/Rx LTE MAIN
	2 WHITE	C1	SECONDARY LTE	Tx3/Rx LTE DIVERSITY
	3 WHITE	C1	MAIN LTE	Tx1/Rx LTE MAIN
	4 WHITE	C1	SECONDARY LTE	Tx3/Rx LTE DIVERSITY
	5 WHITE	C2	MAIN AWS/PCS	Tx1/Rx AWS/PCS MAIN
	6 WHITE	C2	SECONDARY AWS/PCS	Tx3/Rx AWS/PCS DIVERSITY
	7 WHITE	C3	MAIN GSM/UMTS	Tx1/Rx GSM MAIN
	8 WHITE	C3	SECONDARY GSM/UMTS	Tx3/Rx GSM DIVERSITY
	9 WHITE	C3	MAIN GSM/UMTS	Tx1/Rx GSM MAIN
	10 WHITE	C3	SECONDARY GSM/UMTS	Tx3/Rx GSM DIVERSITY

COAX CABLE IDENTIFICATION

CONTRACTOR MUST PROVIDE EASY IDENTIFICATION AND UNIFORM MARKING OF ANTENNA CABLING, PER THE FOLLOWING INSTRUCTIONS:

1. LOCATION: MARKINGS SHALL BE MADE USING COLOR TAPE W/2" – 3 LAYERS THICK CUT NOT TORN STRANDS OF COVERAGE AFFIXED AT THREE PLACES ON THE COAX CABLE RUN AND NOT BE CONCEALED IN TOWER NOR BE INSTALLED ON WEATHERPROOFING AS FOLLOWS:

ALL COLOR CODING AT THE BASE OF THE TOWER AND AT GROUND LEVEL SHALL ONLY BE 3/4" WIDE. USE 2" WIDE TAPE ONLY ON LINES UP HIGH ON THE TOWER.

FIRST – ON THE COAX AT THE CONNECTOR NEAREST THE ANTENNA (WHERE THE COAX AND JUMPER ARE CONNECTED).
SECOND – AT THE BASE OF THE TOWER STRUCTURE. (FOR TOWERS ONLY).
THIRD – AT A POINT OUTSIDE THE BTS. (JUST PRIOR TO MGB).

2. SECTOR IDENTIFICATION: NORMALLY A SITE WILL HAVE UP TO THREE SECTORS. SECTORS SHALL BE DESIGNATED IN A CLOCKWISE MANNER; THE SECTOR IS CLOSEST TO ZERO DEGREES (NORTH), THE BAND C FOLLOW CLOCKWISE IN SEQUENCE.

A SECTOR COAX WILL BE MARKED MAIN 1 AND DIVERSITY 1. NORMALLY SITES WILL INITIALLY GO ON THE AIR WITH AS FEW AS TWO ANTENNAS PER SECTOR AND AS THE SYSTEM GROWS, ADDITIONAL ANTENNAS WILL BE ADDED.

B SECTOR COAX WILL BE MARKED MAIN 2 AND DIVERSITY 2.

C SECTOR COAX WILL BE MARKED MAIN 3 AND DIVERSITY 3.

D SECTOR COAX WILL BE MARKED MAIN 4 AND DIVERSITY 4.

COLOR CODE AS FOLLOWS:
A SECTOR – RED
B SECTOR – BLUE
C SECTOR – WHITE
D SECTOR – YELLOW
UMTS LINES – BAND OF GREEN AFTER ORIGINAL COLOR CODING

MAIN WILL BE MARKED WITH ONE BAND OF TAPE. DIVERSITY WILL BE MARKED WITH TWO BANDS OF TAPE. EXTRA WILL BE MARKED WITH THREE BANDS OF TAPE.

3. OMNI IDENTIFICATION: FOR OMNI SITES, WHICH NORMALLY CONSIST OF THREE ANTENNA, IT IS SUGGESTED THAT THE ORIENTATION OF THE OBSERVER ALSO BE THAT OF LOOKING IN A NORTHERLY DIRECTION.

ANTENNA AND COAX SCHEDULE | N.T.S. | 1

FIGURE 1

T-Mobile

T-MOBILE WEST, LLC
2323 DELGANY STREET
DENVER, CO 80216

POWDER RIVER
Engineering Services, LLC
www.powderriverdev.com

LICENSE #: N/A

REVISIONS

REV	DATE	DESCRIPTION	INT
B	06/13/16	ISSUED FOR REVIEW 90%	JE
A	05/10/16	ISSUED FOR REVIEW 90%	JE

SITE INFORMATION

DN04163B
SW SPRINGS

2520 ARLINGTON DR.
COLORADO SPRINGS, CO
80910

SHEET TITLE:

ANTENNA & HYBRID CABLE SCHEDULE

SHEET NUMBER:

C-13

CPC CM1 16-00070

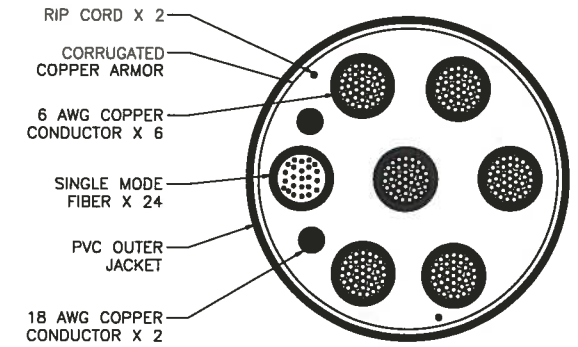

CABLE TYPE	NUMBER, SIZE (AWG)	6/C #6 + 2/C #18
	VOLTAGE	600
	OUTER JACKET	PVC
	SHIELDING	CORRUGATED COPPER
	MAX SHIELD RESISTANCE (OHM/FT @ 20° C	0.0035
	DRAIN	N/A
	RIPCORD	KEVLAR
	DC CONDUCTOR MATERIAL	COPPER
	DC CONDUCTOR SIZE (AWG)	6
	MAX DC RESISTANCE (OHM/1000FT)	0.411 @ 20° C
	COLOR CODE	BLACK/RED
	ALARM CONDUCTOR MATERIAL	COPPER
	ALARM CONDUCTOR SIZE (AWG)	18
	MAX DC RESISTANCE (OHM/1000FT)	6.7
	COLOR CODE	TBD
	FIBER CABLES	SM
	OUTER DIAMETER (IN) – NOMINAL	1.24
	WEIGHT (LB/FT)	1.05
	MINIMUM BEND RADIUS (IN)	15
	BEND MOMENT (LB/FT)	N/A
	TENSILE STRENGTH (LB)	325
	CRUSH RESISTANCE, FOTP–41 (N/MM)	22
	STRENGTH MEMBER	NO
	OPERATING TEMPERATURE RANGE (LOW)	–40° C
	OPERATING TEMPERATURE RANGE (HIGH)	80° C
FIBER TYPE		LOW WATER PEAK SINGLE MODE LOOSE TUBE
FIBER STANDARD COMPLIANCE		ITU–T REC. G.652.D, G.657.A2
		IEC 60793–2–50 TYPE B.1.3 & TYPE B.6 A&B
FIBER COATING DIAMETER (um)		.242 +/– .007 OR .9 +/– .005 MM
FIBER COUNT		24
NUMBER OF FIBER SUBUNITS		1
FIBER COUNT EACH UNIT		24
FIBER OUTER JACKETS		FR JACKET
MAX ATTENUATION, 1310 NM (dB/Km)		LESS THAN/EQUALTO 0.5
MAX ATTENUATION, 1550 nm (dB/Km)		LESS THAN/EQUALTO 0.5

NOT USED

SCALE: NTS | 2

CABLE SPECIFICATIONS

SCALE: NTS | 1

T-Mobile

T–MOBILE WEST, LLC
2323 DELGANY STREET
DENVER, CO 80216

POWDER RIVER
Engineering Services, LLC
www.powderriverdev.com

LICENSE #: N/A

REVISIONS

REV	DATE	DESCRIPTION	INT
B	06/13/16	ISSUED FOR REVIEW 90%	JE
A	05/10/16	ISSUED FOR REVIEW 90%	JE

SITE INFORMATION

DN04163B
SW SPRINGS

2520 ARLINGTON DR.
COLORADO SPRINGS, CO
80910

SHEET TITLE:

HYBRID CABLE DETAILS

SHEET NUMBER:

C-14

CPC CM1 16–00070

FIGURE 1

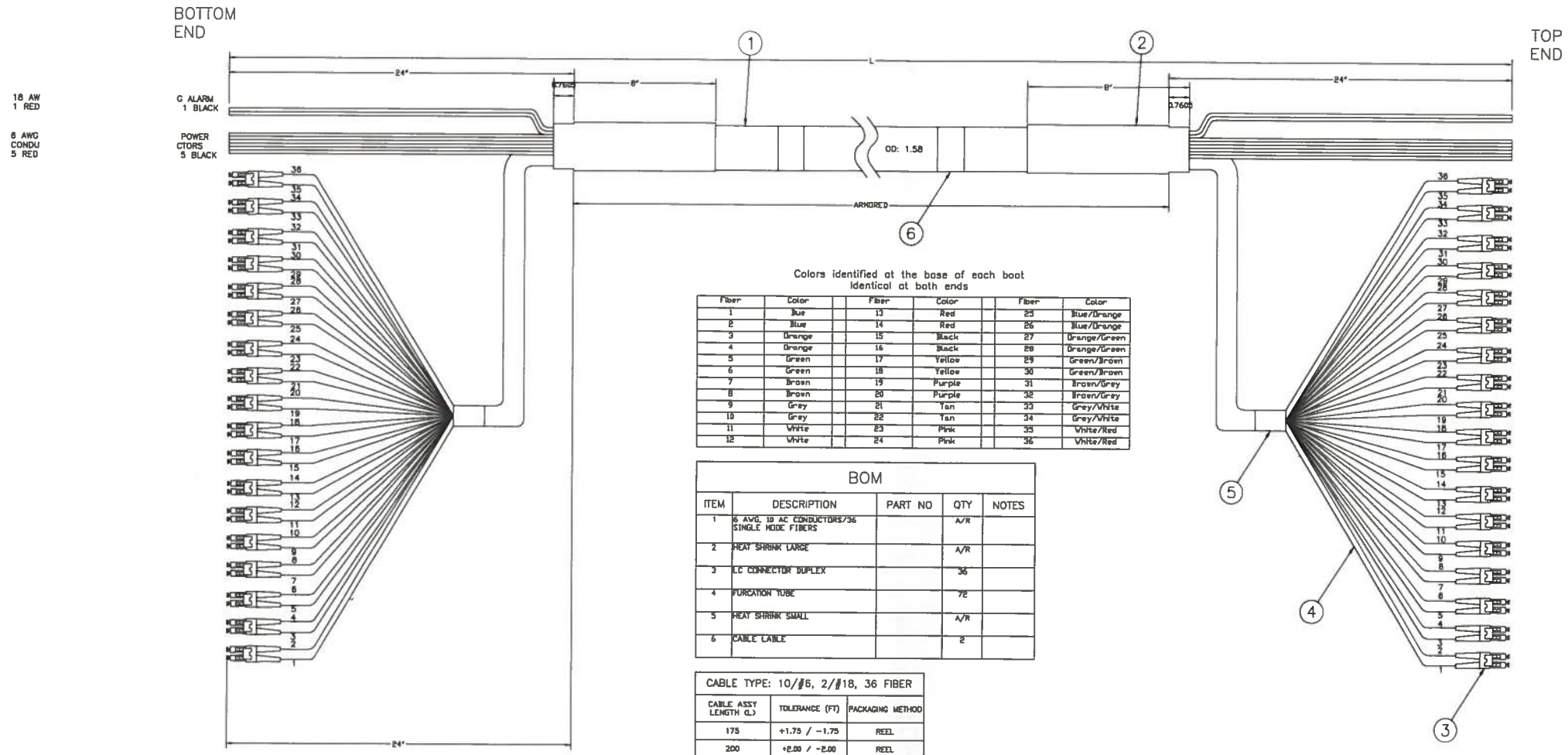

Colors identified at the base of each boot
identical at both ends

Fiber	Color	Fiber	Color	Fiber	Color
1	Blue	13	Red	25	Blue/Orange
2	Blue	14	Red	26	Blue/Orange
3	Orange	15	Black	27	Orange/Green
4	Orange	16	Black	28	Orange/Green
5	Green	17	Yellow	29	Green/Brown
6	Green	18	Yellow	30	Green/Brown
7	Brown	19	Purple	31	Brown/Grey
8	Brown	20	Purple	32	Brown/Grey
9	Grey	21	Tan	33	Grey/White
10	Grey	22	Tan	34	Grey/White
11	White	23	Pink	35	White/Red
12	White	24	Pink	36	White/Red

BOM

ITEM	DESCRIPTION	PART NO	QTY	NOTES
1	6 AWG, 10 AC CONDUCTORS/36 SINGLE MODE FIBERS		A/R	
2	HEAT SHRINK LARGE		A/R	
3	LC CONNECTOR DUPLEX		36	
4	FURCATION TUBE		72	
5	HEAT SHRINK SMALL		A/R	
6	CABLE CABLE		2	

CABLE TYPE: 10/#6, 2/#18, 36 FIBER

CABLE ASSY LENGTH (L)	TOLERANCE (FT)	PACKAGING METHOD
175	+1.75 / -1.75	REEL
200	+2.00 / -2.00	REEL
225	+2.25 / -2.25	REEL
250	+2.50 / -2.50	REEL
275	+2.75 / -2.75	REEL
300	+3.00 / -3.00	REEL
325	+3.25 / -3.25	REEL
350	+3.50 / -3.50	REEL
375	+3.75 / -3.75	REEL

NOTES:

1. DIMENSIONS ARE IN INCHES.
2. 18 DUPLEX LC CONNECTORS PER END, 4 DUPLEX LC CONNECTORS PER GROUP, TOTAL OF 5 GROUPS BUT 5TH GROUP WILL HAVE ONLY 2 DUPLEX LC CONNECTORS.
3. TOTAL OF 18 PAIRS OF SINGLE MODE FIBERS.
4. TOTAL OF 10 AC CABLES 5 RED & 5 BLACK.
5. TOP END AND BOTTOM END ARE IDENTICAL.
6. LABEL AT BOTH ENDS WITH: SERIAL NUMBER, PART NUMBER AND CUSTOMER NAME.
7. INSERTION LOSS AND RETURN LOSS SHALL BE MEASURED 100% SAMPLING FOR ALL PRODUCTION.
8. TEST AND MEASUREMENT REPORT SHALL BE FURNISHED WITH CABLE ASSEMBLY.
9. ALL CONNECTORS SHALL BE SHIPPED WITH FURRULES PROTECTED WITH REMOVABLE CAPS.
10. ALL FIBER BREAKOUT WILL BE PROTECTED FROM WATER PENETRATION

HYBRID CABLE DETAILS

SCALE: NTS

1

T-Mobile
T-MOBILE WEST, LLC
2323 DELGANY STREET
DENVER, CO 80216

POWDER RIVER
Engineering Services, LLC
www.powderriverdev.com

LICENSE #: N/A

REVISIONS

REV	DATE	DESCRIPTION	INT
B	06/13/16	ISSUED FOR REVIEW 90%	JE
A	05/10/16	ISSUED FOR REVIEW 90%	JE

SITE INFORMATION

DN04163B
SW SPRINGS

2520 ARLINGTON DR.
COLORADO SPRINGS, CO
80910

SHEET TITLE:

HYBRID CABLE DETAILS

SHEET NUMBER:

C-15

CPC CM1 16-00070

FIGURE 1

SEE SHEET C-5 FOR MORE INFORMATION ON EQUIPMENT LAYOUT.

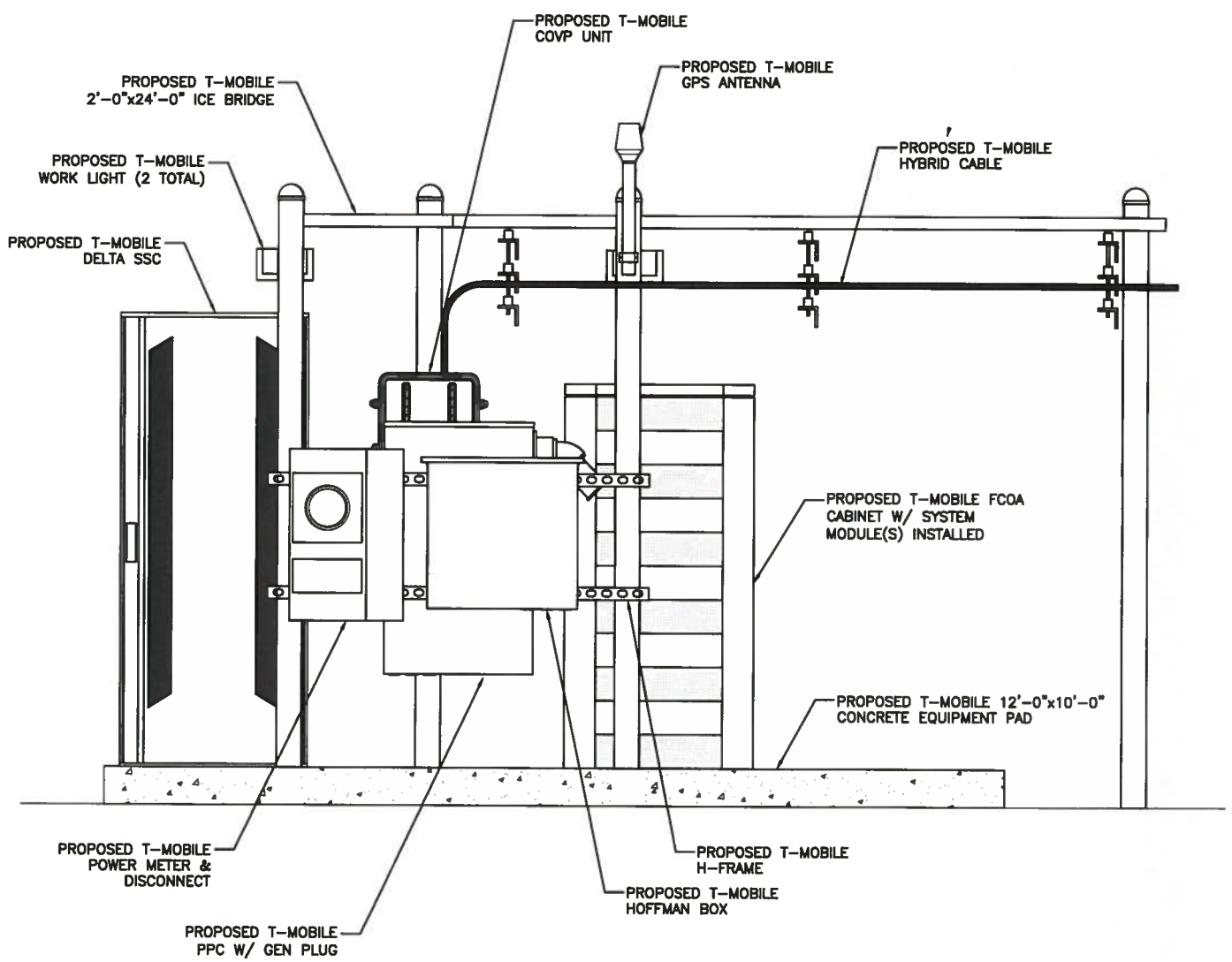

TYPICAL EQUIPMENT ELEVATION | N.T.S. | 2

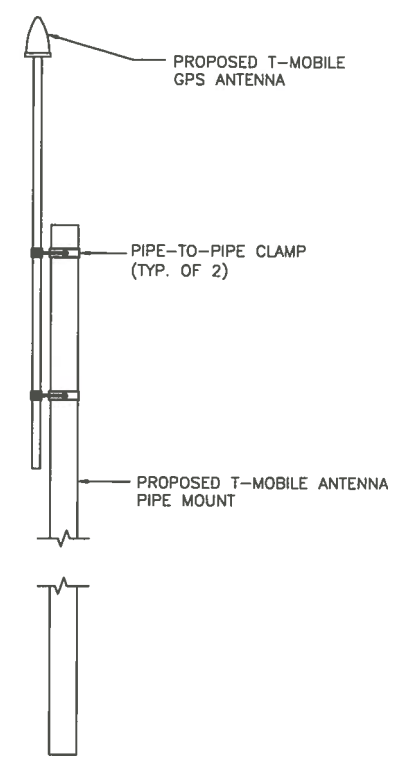

GPS DETAILS | N.T.S. | 1

T-Mobile

T-MOBILE WEST, LLC
2323 DELGANY STREET
DENVER, CO 80216

POWDER RIVER
Engineering Services, LLC
www.powderriverdev.com

LICENSE #: N/A

REVISIONS

REV	DATE	DESCRIPTION	INT
B	06/13/16	ISSUED FOR REVIEW 90%	JE
A	05/10/16	ISSUED FOR REVIEW 90%	JE

SITE INFORMATION

DN04163B
SW SPRINGS

2520 ARLINGTON DR.
COLORADO SPRINGS, CO
80910

SHEET TITLE:

EQUIPMENT DETAILS

SHEET NUMBER:

S-1

CPC CM1 16-00070

FIGURE 1

T-MOBILE WEST, LLC
2323 DELGANY STREET
DENVER, CO 80216

POWDER RIVER
Engineering Services, LLC
www.powderriverdev.com

LICENSE #: N/A

REV	DATE	DESCRIPTION	INT
B	06/13/16	ISSUED FOR REVIEW 90%	JE
A	05/10/16	ISSUED FOR REVIEW 90%	JE

SITE INFORMATION

DN04163B
SW SPRINGS

2520 ARLINGTON DR.
COLORADO SPRINGS, CO
80910

SHEET TITLE:
ANTENNA
MOUNT DETAILS

SHEET NUMBER:
S-2
CPC CM1 16-00070

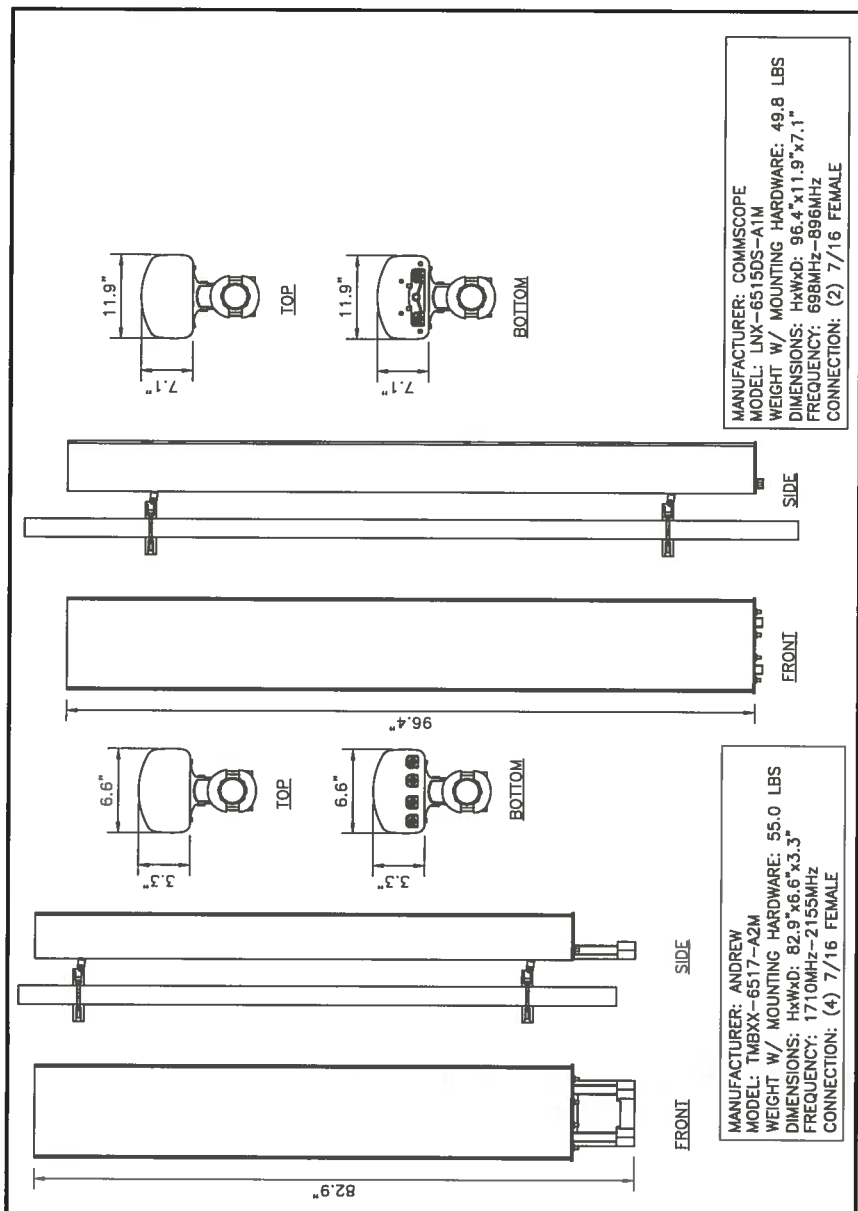

SCALE: NTS 1

ANTENNA DETAILS

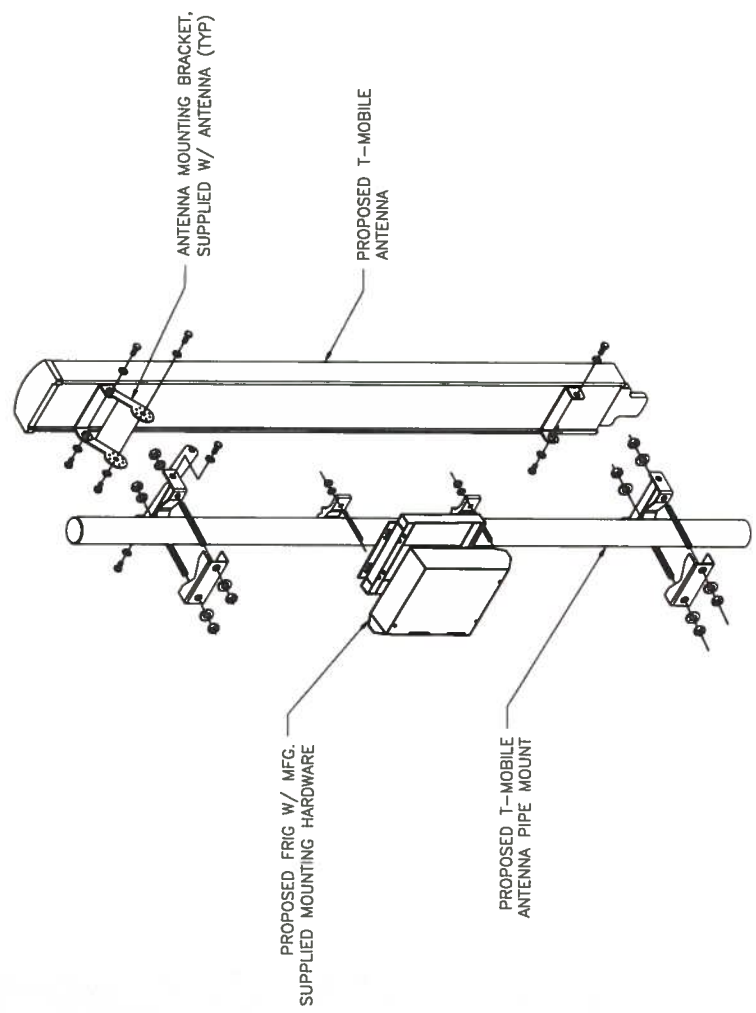

SCALE: NTS 2

FRIG MOUNTING DETAIL

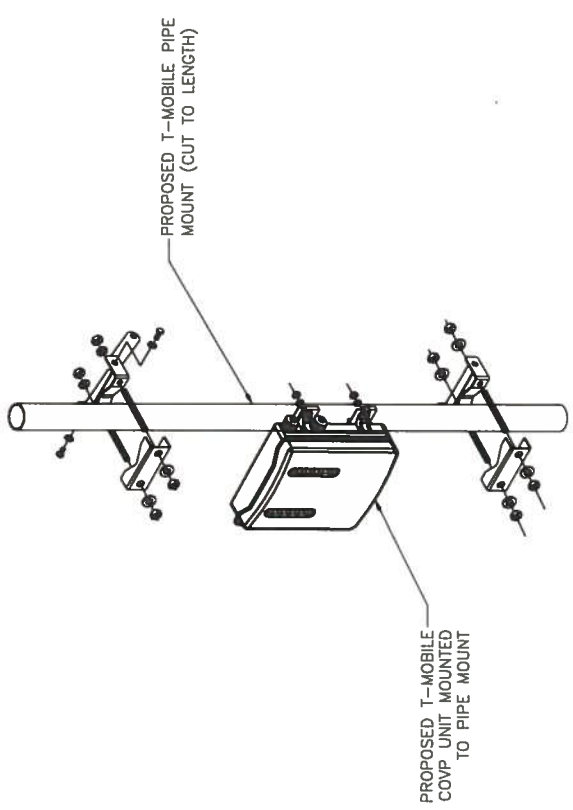

SCALE: NTS 3

COVP MOUNTING DETAIL

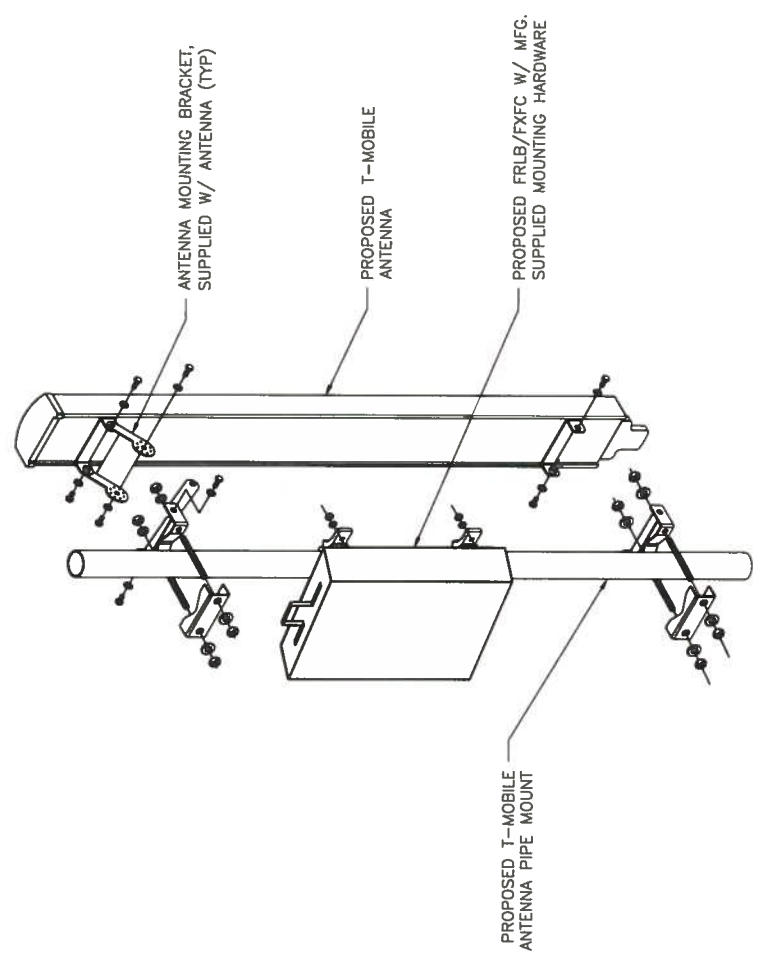

SCALE: NTS 4

FRLB/FXFC MOUNTING DETAIL

FIGURE 1

Outline Dimension 30"W x 72"H x 36"D

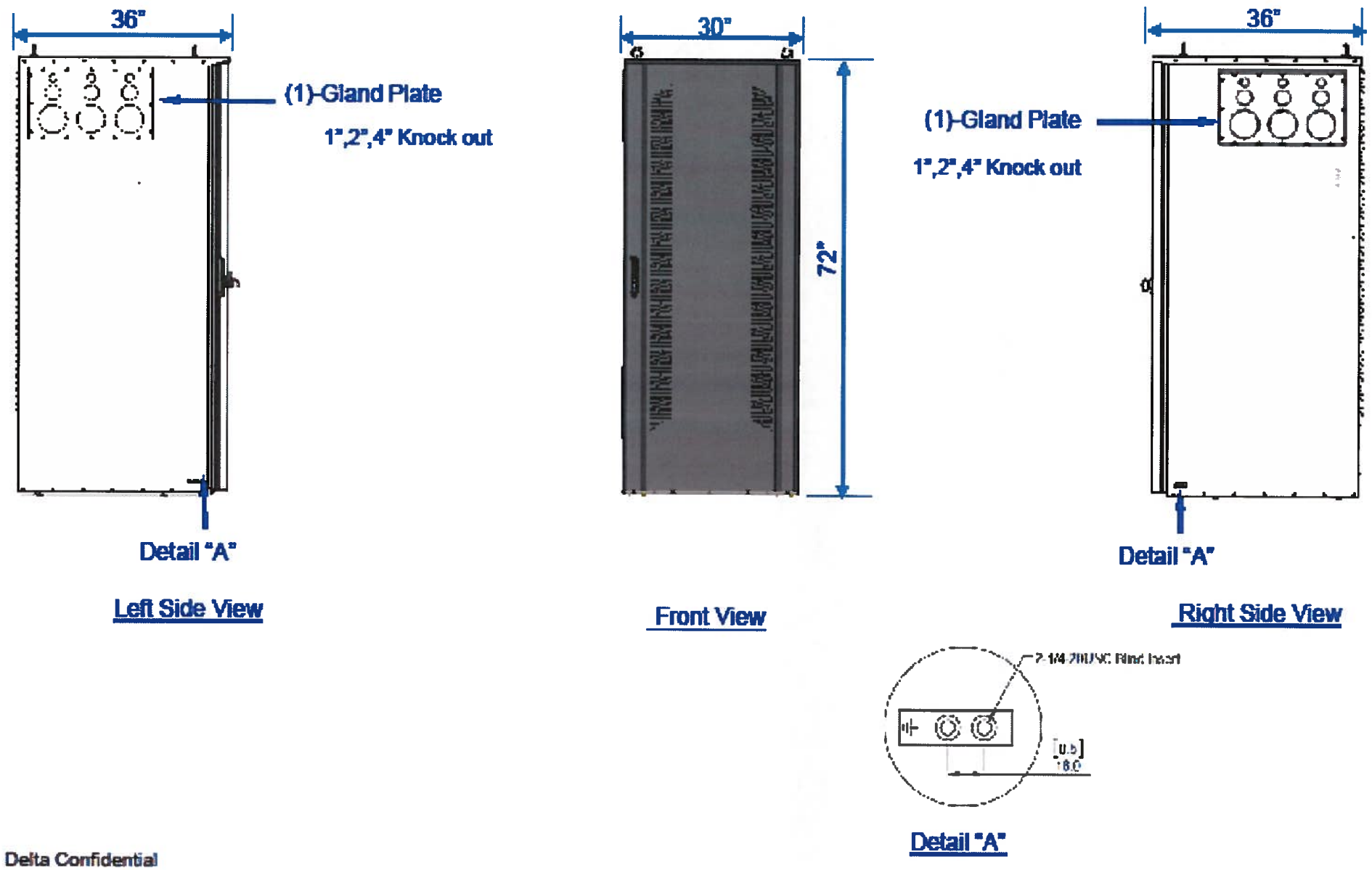

Delta Confidential

14

T-MOBILE DELTA SSC DETAILS | N.T.S. | 1

T-Mobile

T-MOBILE WEST, LLC
2323 DELGANY STREET
DENVER, CO 80216

POWDER RIVER
Engineering Services, LLC
www.powderriverdev.com

LICENSE #: N/A

REVISIONS

REV	DATE	DESCRIPTION	INT
B	06/13/16	ISSUED FOR REVIEW 90%	JE
A	05/10/16	ISSUED FOR REVIEW 90%	JE

SITE INFORMATION

DN04163B
SW SPRINGS

2520 ARLINGTON DR.
COLORADO SPRINGS, CO
80910

SHEET TITLE:

EQUIPMENT DETAILS

SHEET NUMBER:

S-3

CPC CM1 16-00070

FIGURE 1

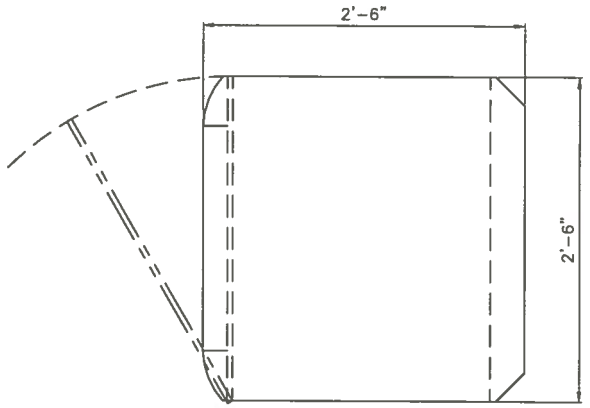

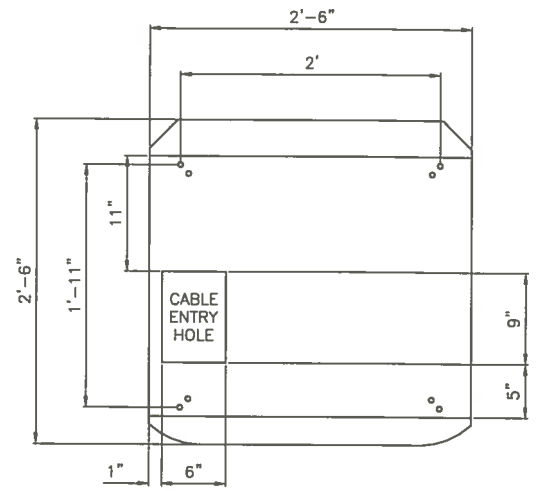

PROPERTY	REQUIRED CLEARANCE
FRONT OF THE CABINET	800 mm (31.5 in.)
BEHIND THE CABINET (ONE CABINET INSTALLED)	0 mm/in.
BEHIND THE CABINET (SEVERAL CABINETS INSTALLED)	100 mm (4.0 in.)
BEHIND THE CABINET (WITH BACK ACCESS)	500 mm (19.7 in.)
BEHIND THE CABINET (WITH AIR FILTER AND CABLES ROUTED VIA BACK)	1000 mm (39.3 in.)
BEHIND THE CABINET (WITH AIR FILTER AND CABLES ROUTED VIA SIDE OR VIA BOTTOM)	450 mm (17.7 in.)
DOOR OPENING DIRECTION	50 mm (2.0 in.)
DOOR OPENING WITH WIND BREAKER	80 mm (3.2 in.)
ABOVE THE CABINET	500 mm (19.7 in.)

THE FLOOR MUST BE LEVEL. REQUIREMENTS FOR THE BASE ARE AS FOLLOWS:

- ABERRATION FOR PLANE = (0.04 in.)
- MAXIMUM INCLINATION = 2 mm/METER

WHEN INSTALLING 3RD PARTY 19" RACK EQUIPMENT IN THE FCOA, THE DISTANCE FROM THE RACK FIXING SPACE TO THE INNER SURFACE OF THE DOOR MUST BE 135 mm (5.3 in.)

FOR THE DIMENSIONS OF THE FCOA CABINET, SEE FCOA DIMENSIONS AND WEIGHT.

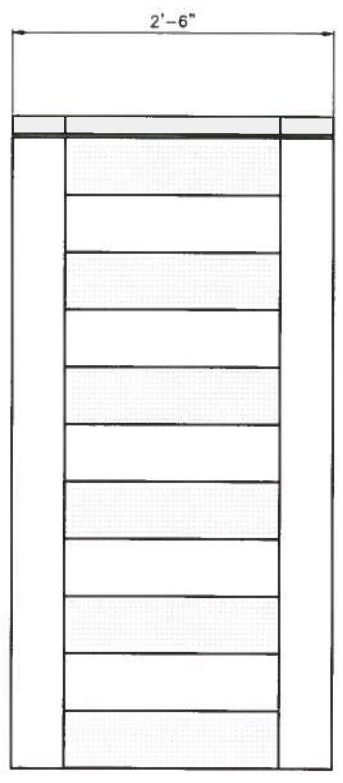

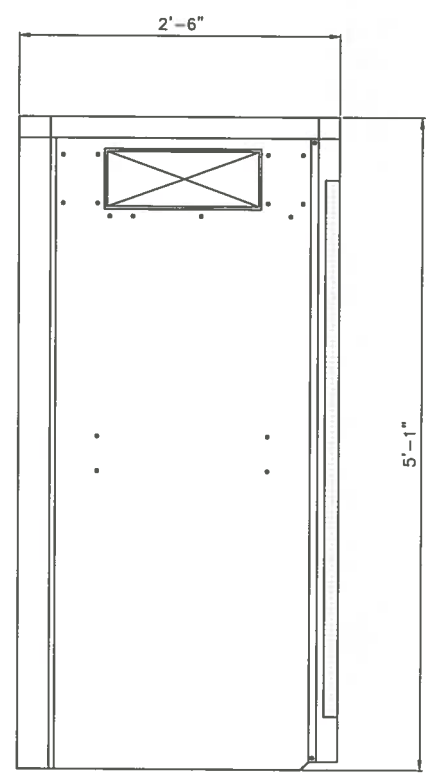

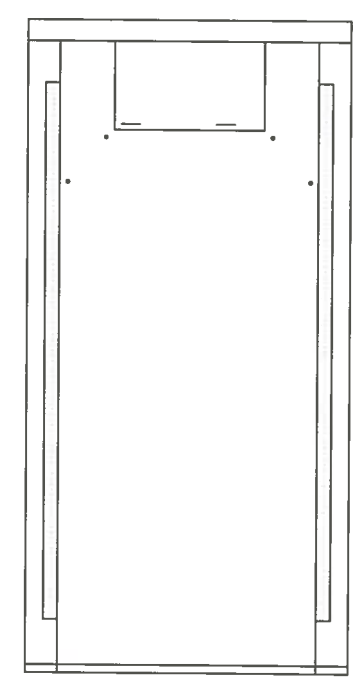

T-MOBILE FCOA DETAILS

N.T.S.

1

T-Mobile

T-MOBILE WEST, LLC
2323 DELGANY STREET
DENVER, CO 80216

POWDER RIVER
Engineering Services, LLC
www.powderriverdev.com

LICENSE #: N/A

REVISIONS

REV	DATE	DESCRIPTION	INT
B	06/13/16	ISSUED FOR REVIEW 90%	JE
A	05/10/16	ISSUED FOR REVIEW 90%	JE

SITE INFORMATION

DN04163B
SW SPRINGS

2520 ARLINGTON DR.
COLORADO SPRINGS, CO
80910

SHEET TITLE:

EQUIPMENT DETAILS

SHEET NUMBER:

S-4

CPC CM1 16-00070

FIGURE 1

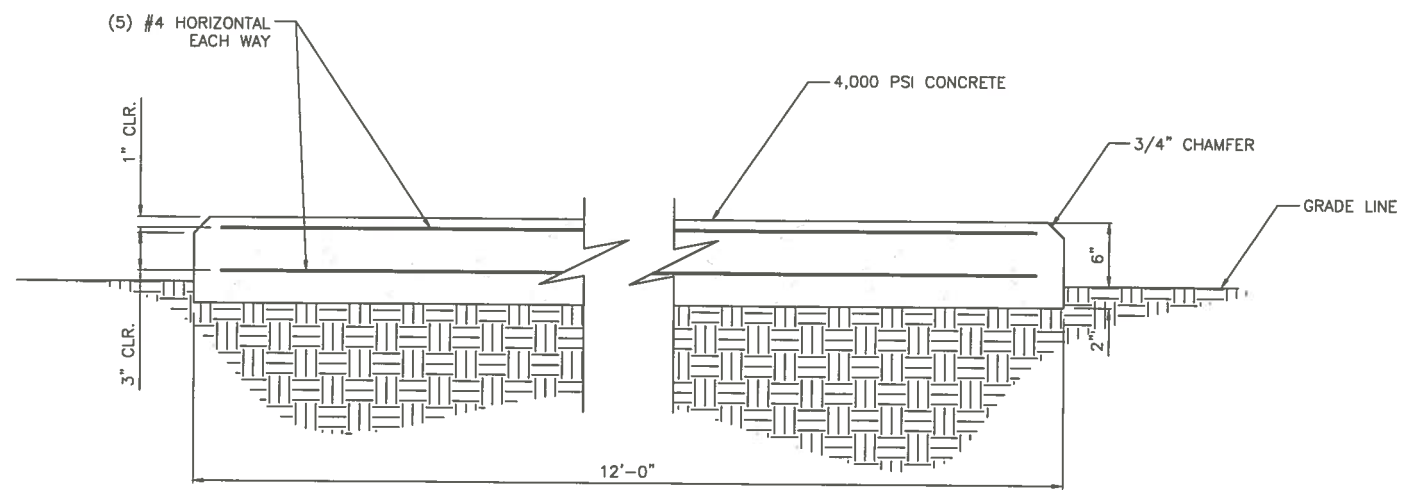

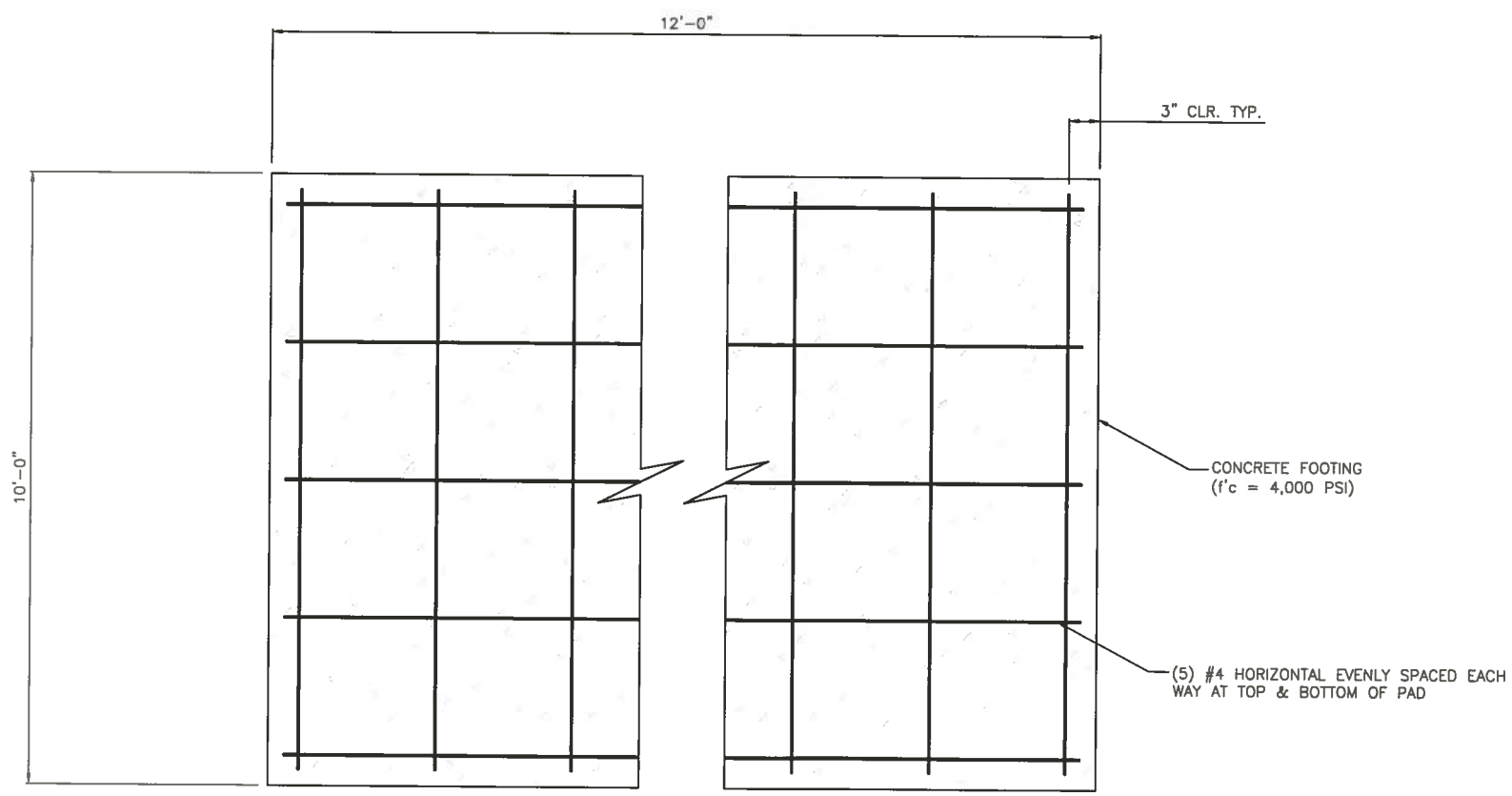

CONCRETE PAD DETAILS

N.T.S.

1

T-Mobile

T-MOBILE WEST, LLC
2323 DELGANY STREET
DENVER, CO 80216

POWDER RIVER
Engineering Services, LLC
www.powderriverdev.com

LICENSE #: N/A

REVISIONS

REV	DATE	DESCRIPTION	INT
B	06/13/16	ISSUED FOR REVIEW 90%	JE
A	05/10/16	ISSUED FOR REVIEW 90%	JE

SITE INFORMATION

DN04163B
SW SPRINGS

2520 ARLINGTON DR.
COLORADO SPRINGS, CO
80910

SHEET TITLE:

STRUCTURAL DETAILS

SHEET NUMBER:

S-5

CPC CM1 16-00070

FIGURE 1

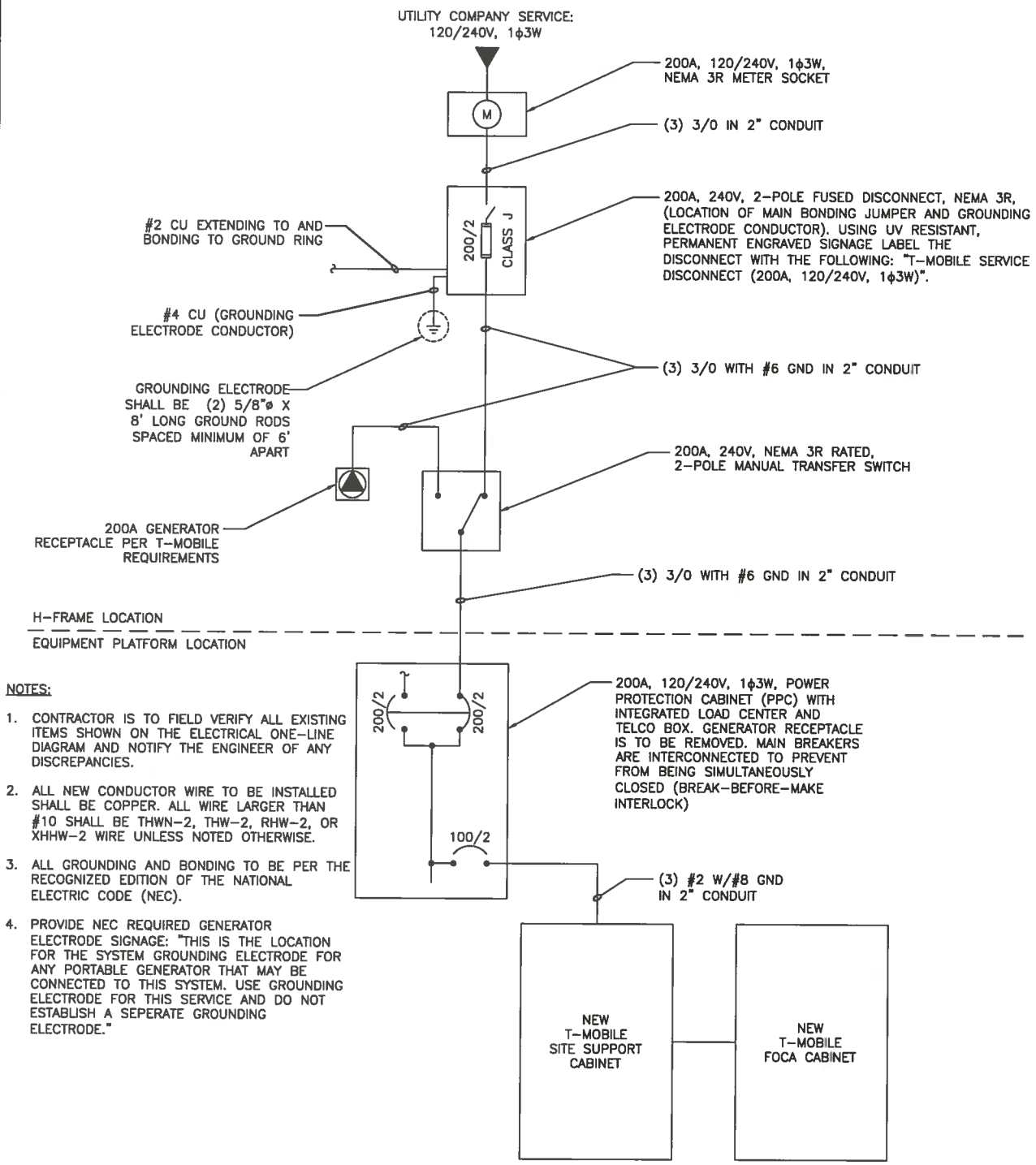

NOTES:

1. CONTRACTOR IS TO FIELD VERIFY ALL EXISTING ITEMS SHOWN ON THE ELECTRICAL ONE-LINE DIAGRAM AND NOTIFY THE ENGINEER OF ANY DISCREPANCIES.
2. ALL NEW CONDUCTOR WIRE TO BE INSTALLED SHALL BE COPPER. ALL WIRE LARGER THAN #10 SHALL BE THWN-2, THW-2, RHW-2, OR XHHW-2 WIRE UNLESS NOTED OTHERWISE.
3. ALL GROUNDING AND BONDING TO BE PER THE RECOGNIZED EDITION OF THE NATIONAL ELECTRIC CODE (NEC).
4. PROVIDE NEC REQUIRED GENERATOR ELECTRODE SIGNAGE: "THIS IS THE LOCATION FOR THE SYSTEM GROUNDING ELECTRODE FOR ANY PORTABLE GENERATOR THAT MAY BE CONNECTED TO THIS SYSTEM. USE GROUNDING ELECTRODE FOR THIS SERVICE AND DO NOT ESTABLISH A SEPERATE GROUNDING ELECTRODE."

ELECTRICAL ONE-LINE DIAGRAM | N.T.S. | 3

MAIN: 200 AMP MAIN CIRCUIT BREAKER — A/C RATING: 22,000 AMPS

VOLTAGE/PHASE: 120/240V, 1-PHASE, 3-WIRE — MOUNTING: INSIDE PPC (NEMA 3R)

DESCRIPTION	WIRE SIZE HOT	WIRE SIZE NEU	WIRE SIZE GND	C/B	C or NC	CIR NO.	LOAD (VA) A-PHASE	LOAD (VA) B-PHASE	CIR NO.	C/B	WIRE SIZE HOT	WIRE SIZE NEU	WIRE SIZE GND	DESCRIPTION
SURGE PROTECTION DEVICE	-	-	-	60 / 2		1	-		2	20 / 1	#12	#12	#12	GFCI RECEPTACLE
					NC		180							
						3		-	4	20 / 1	#12	#12	#12	TELCO BOX RECEPTACLE
					NC			360						
TECH LIGHT / GFCI RECEPTACLE	#8	#8	-	20 / 1	NC	5	135		6	30 / 2	#6	-	-	CABINET HEATER
					NC		1800							
TELCO FAN	#12	#12	#12	10 / 1	NC	7		45	8					
					NC			1800						
RECTIFIER SHELF #1	#1	-	#6	60 / 2	C	9	4320		10	15 / 2	#10	-	-	CABINET A/C
					C		1170							
					C	11		4320	12					
					C			1170						
RECTIFIER SHELF #2	#1	-	-	60 / 2	C	13	4320		14	15 / 1	#12	#12	#12	CABINET RECEPTACLE
					NC		180							
					C	15		4320	16					BLANK
RECEPTACLE	#12	#12	#12	15 / 1	NC	17	180		18					
BLANK						19			20					
						21			22					
						23			24					
BASE LOAD (VA) =							12285	12015						
25% OF CONTINUOUS LOAD (VA) =							2453	2453						
TOTAL LOAD (VA) =							14738	14468						
TOTAL LOAD (A) =							123	121						

"C" DESIGNATION IDENTIFIES CONTINUOUS LOADS AND MOTOR LOADS AS REQUIRED BY SECTIONS 230.42 AND 430.24 OF THE NEC

A/C PANEL SCHEDULE | N.T.S. | 1

NOT USED | N.T.S. | 2

T-Mobile

T-MOBILE WEST, LLC
2323 DELGANY STREET
DENVER, CO 80216

POWDER RIVER
Engineering Services, LLC
www.powderriverdev.com

LICENSE #: N/A

REVISIONS

REV	DATE	DESCRIPTION	INT
B	06/13/16	ISSUED FOR REVIEW 90%	JE
A	05/10/16	ISSUED FOR REVIEW 90%	JE

SITE INFORMATION

DN04163B
SW SPRINGS

2520 ARLINGTON DR.
COLORADO SPRINGS, CO
80910

SHEET TITLE:

ELECTRICAL DETAILS

SHEET NUMBER:

E-1

CPC CM1 16-00070

FIGURE 1

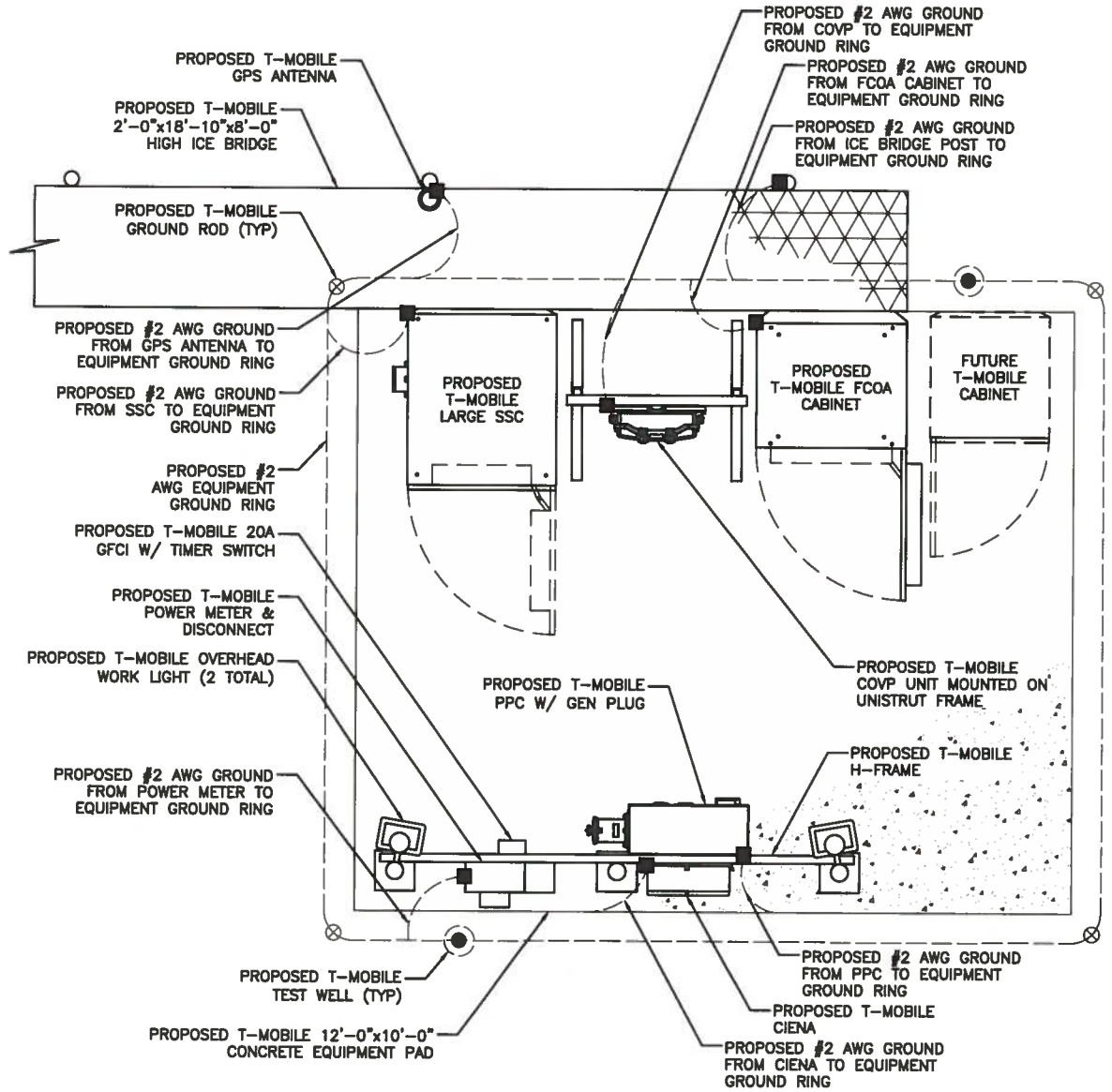

GROUNDING NOTES:

1. GROUNDING SHALL COMPLY WITH NEC, T-MOBILE AND NSN STANDARDS. CONTRACTOR SHALL VERIFY EXISTING GROUNDING CONDITIONS. CORRECTING ANY DEFICIENCIES TO BE INCLUDED IN ORIGINAL PRICING AND CORRECT DEFICIENCIES DURING NEW CONSTRUCTION. INCLUDING MISSING GROUND BARS, BAD GROUND WELDS, MISSING GROUND LEADS OR BROKEN GROUND LEADS, ETC.
2. ALL EXTERIOR GROUND CONDUCTORS BETWEEN EQUIPMENT/ GROUND BARS AND THE GROUND RING, SHALL BE #2 AWG SOLID TIN PLATED COPPER IN 3/4" PROTECTIVE PVC UNLESS OTHERWISE INDICATED.
3. APPROVED ANTIOXIDANT COATINGS (NO-OX) SHALL BE USED ON ALL COMPRESSION AND BOLTED GROUND CONNECTIONS.
4. ROUTE GROUNDING CONDUCTORS ALONG THE SHORTEST AND STRAIGHTEST PATH POSSIBLE. USE OF 90° BENDS IN THE PROTECTION GROUNDING CONDUCTORS SHALL BE AVOIDED WHEN 45° BENDS CAN BE ADEQUATELY SUPPORTED. IN ALL CASES, BENDS SHALL BE MADE WITH A MINIMUM BEND RADIUS OF 12 INCHES.
5. ALL TOWER TOP GROUND WIRES SHALL BE SUPPORTED EVERY TWO FEET.

LEGEND:

- EXISTING GROUND RING
- ▲ CADWELD CONNECTION (EXOTHERMIC WELD)
- ■ MECHANICAL CONNECTION
- ⊗ GROUND ROD

EQUIPMENT GROUNDING PLAN | N.T.S. | 2

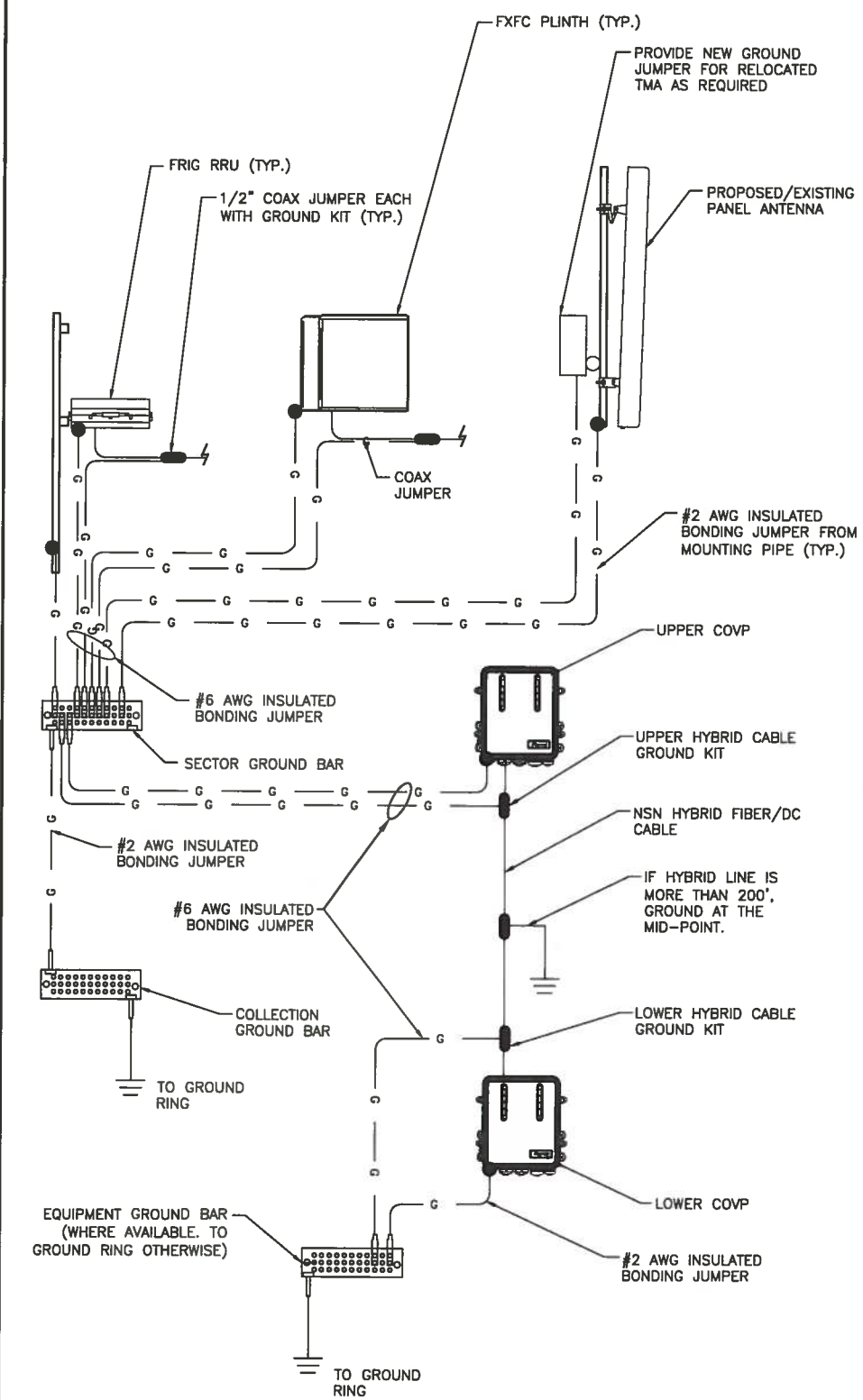

ANTENNA GROUNDING SCHEMATIC | N.T.S. | 1

T-Mobile

T-MOBILE WEST, LLC
2323 DELGANY STREET
DENVER, CO 80216

POWDER RIVER
Engineering Services, LLC
www.powderriverdev.com

LICENSE #: N/A

REVISIONS

REV	DATE	DESCRIPTION	INT
B	06/13/16	ISSUED FOR REVIEW 90%	JE
A	05/10/16	ISSUED FOR REVIEW 90%	JE

SITE INFORMATION

DN04163B
SW SPRINGS

2520 ARLINGTON DR.
COLORADO SPRINGS, CO
80910

SHEET TITLE:
GROUNDING PLANS

SHEET NUMBER:
G-1
CPC CM1 16-00070

FIGURE 1

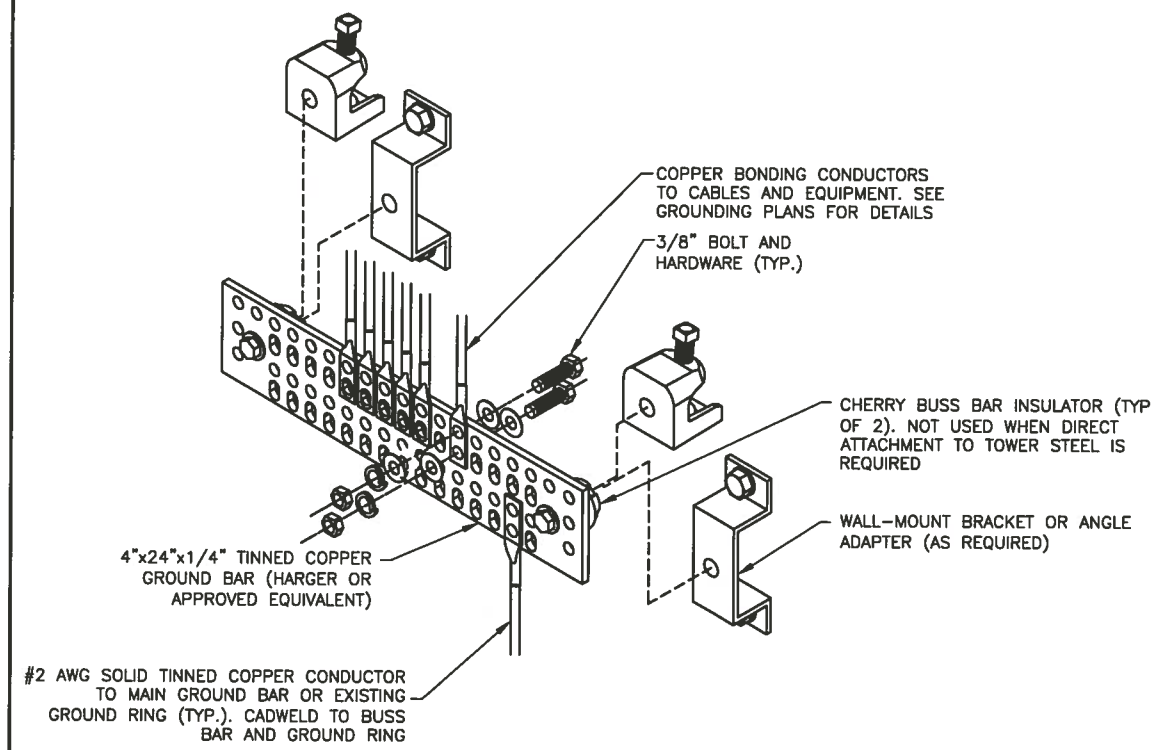

GROUND BAR DETAIL | N.T.S. | 3

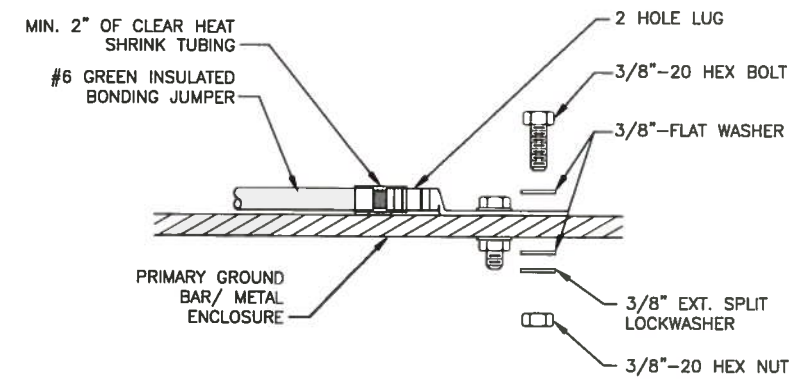

INSTALLATION NOTES:

1. SELECT BOLT LENGTH TO PROVIDE A MINIMUM OF TWO EXPOSED THREADS.
2. BURNISH MOUNTING SURFACE TO REMOVE PAINT IN THE AREA OF LUG CONTACT.
3. APPLY ANTI-OXIDANT COMPOUND TO MATING SURFACE OF LUG AND WIPE CLEAN EXCESS COMPOUND.
4. USE SOLID COPPER WIRE AND MECHANICAL 2-HOLE LUG FOR ALL EXTERIOR GROUNDING.

MECHANICAL GROUND CONNECTION DETAIL | N.T.S. | 1

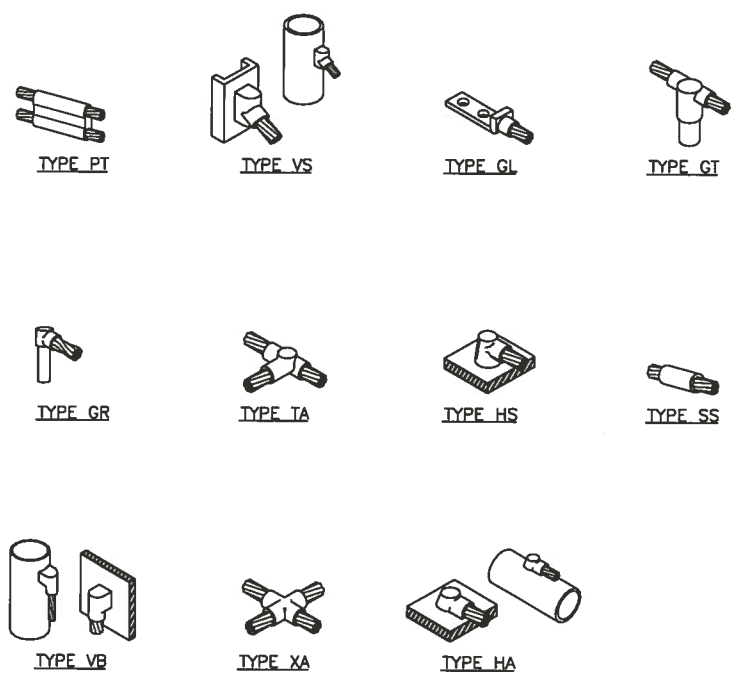

COORDINATE WITH CONSTRUCTION MANAGER FOR PROJECT SPECIFIC MOLD TYPES

TYPICAL CADWELD CONNECTIONS | N.T.S. | 4

NOT USED | N.T.S. | 2

T-Mobile

T-MOBILE WEST, LLC
2323 DELGANY STREET
DENVER, CO 80216

POWDER RIVER
Engineering Services, LLC
www.powderriverdev.com

LICENSE #: N/A

REVISIONS

REV	DATE	DESCRIPTION	INT
B	06/13/16	ISSUED FOR REVIEW 90%	JE
A	05/10/16	ISSUED FOR REVIEW 90%	JE

SITE INFORMATION

DN04163B
SW SPRINGS

2520 ARLINGTON DR.
COLORADO SPRINGS, CO
80910

SHEET TITLE:
GROUNDING DETAILS

SHEET NUMBER:
G-2
CPC CM1 16-00070

FIGURE 1

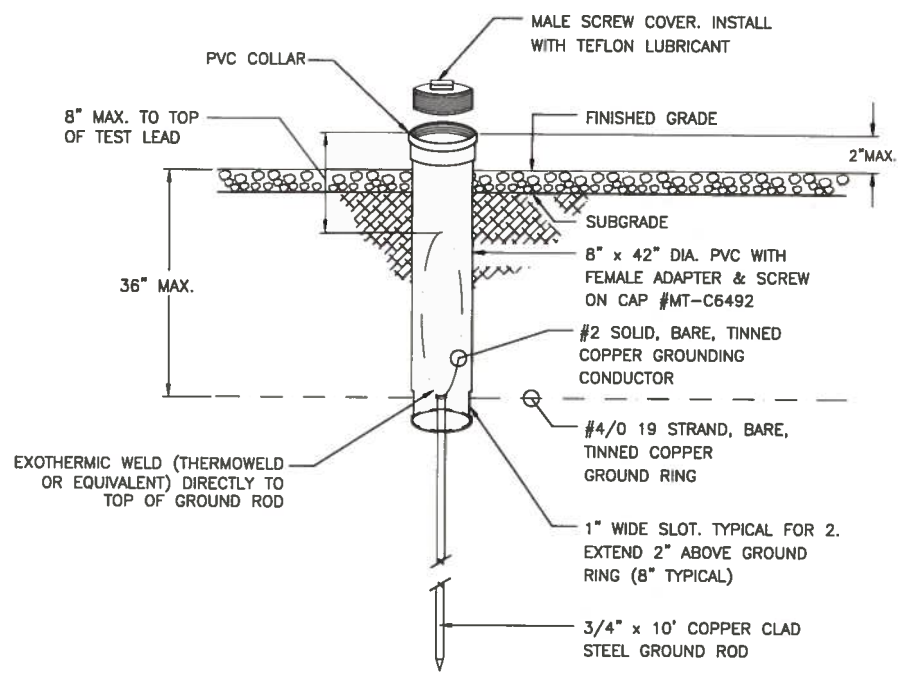

TEST WELL DETAIL | N.T.S. | 3

NOTES:

1. LEAN CONCRETE, RED-COLORED TOP, MAY BE USED IN PLACE OF COMPACTED SAND.
2. IF POWER AND TELCO ARE PLACED IN THE SAME TRENCH, PER NEC CODE, A MINIMUM OF 12" SEPARATION IS REQUIRED BETWEEN THE POWER AND FIBER CONDUIT.

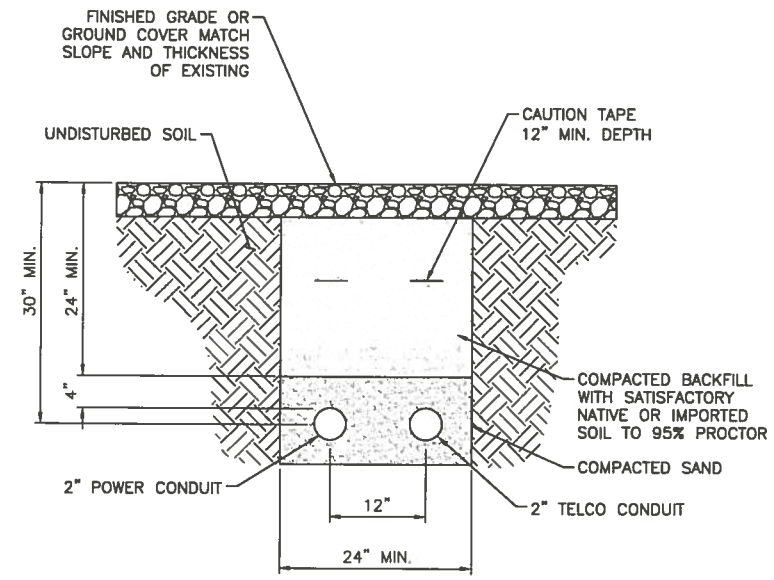

ELECTRICAL/TELCO TRENCH DETAIL | N.T.S. | 1

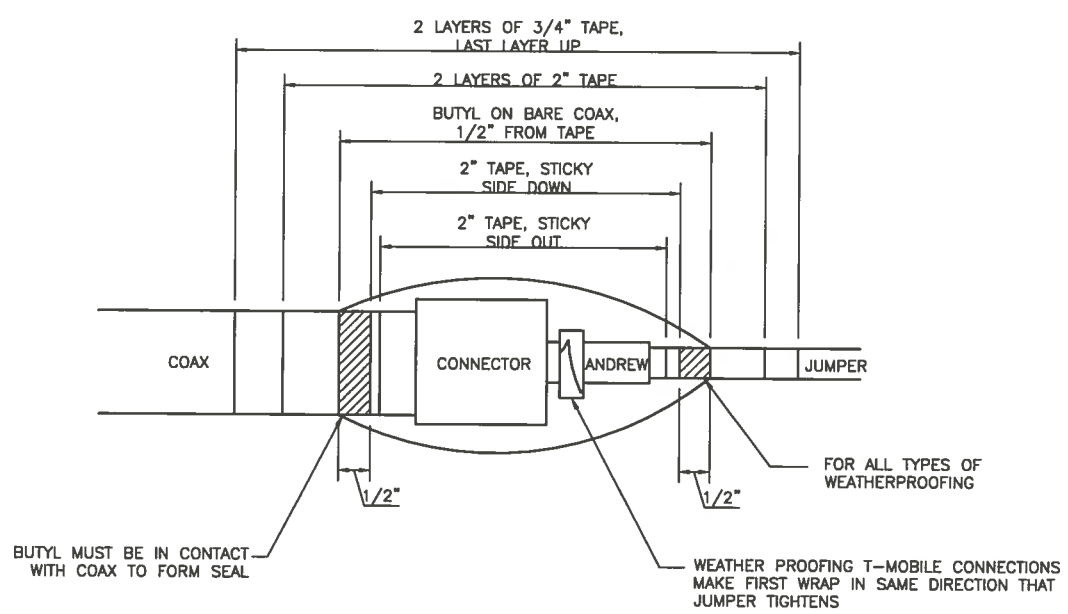

WEATHERPROOFING DETAIL | N.T.S. | 4

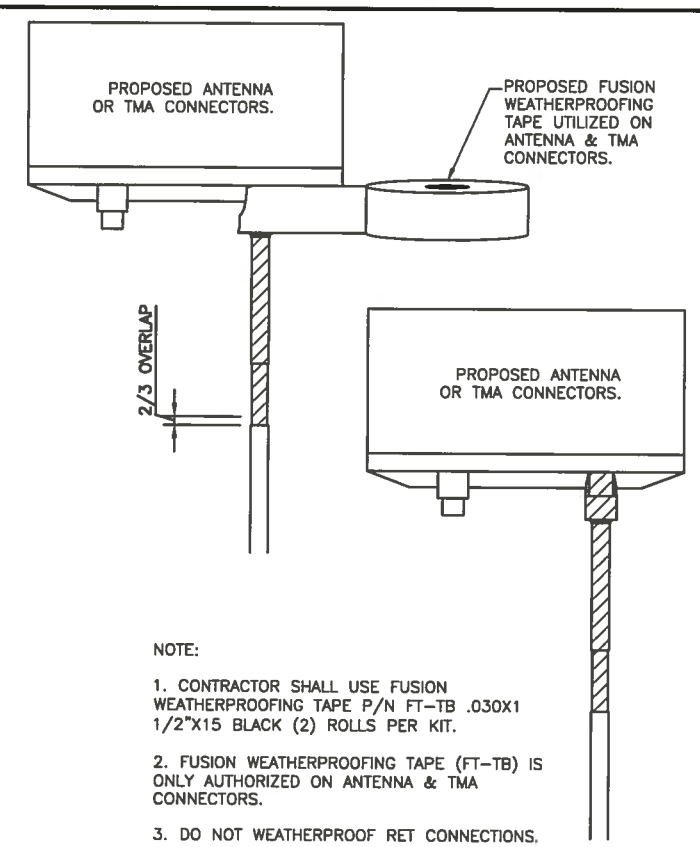

NOTE:

1. CONTRACTOR SHALL USE FUSION WEATHERPROOFING TAPE P/N FT-TB .030X1 1/2"X15 BLACK (2) ROLLS PER KIT.
2. FUSION WEATHERPROOFING TAPE (FT-TB) IS ONLY AUTHORIZED ON ANTENNA & TMA CONNECTORS.
3. DO NOT WEATHERPROOF RET CONNECTIONS.

WEATHERPROOFING DETAIL AND ANTENNA | N.T.S. | 2

T-MOBILE WEST, LLC
2323 DELGANY STREET
DENVER, CO 80216

POWDER RIVER
Engineering Services, LLC
www.powderriverdev.com

LICENSE #: N/A

REVISIONS

REV	DATE	DESCRIPTION	INT
B	06/13/16	ISSUED FOR REVIEW 90%	JE
A	05/10/16	ISSUED FOR REVIEW 90%	JE

SITE INFORMATION

DN04163B
SW SPRINGS

2520 ARLINGTON DR.
COLORADO SPRINGS, CO
80910

SHEET TITLE:

GROUNDING DETAILS

SHEET NUMBER:

G-3

CPC CM1 16-00070

FIGURE 1

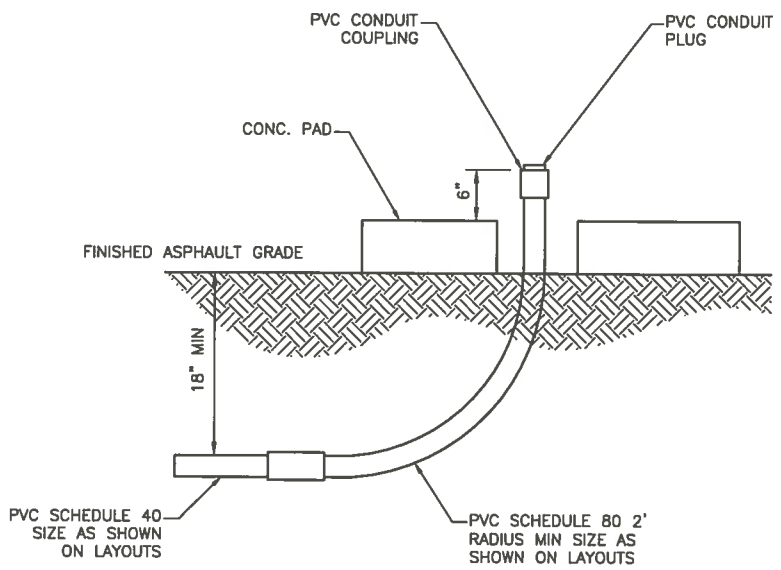

CONDUIT STUB-UP THROUGH PAD | N.T.S. | 3

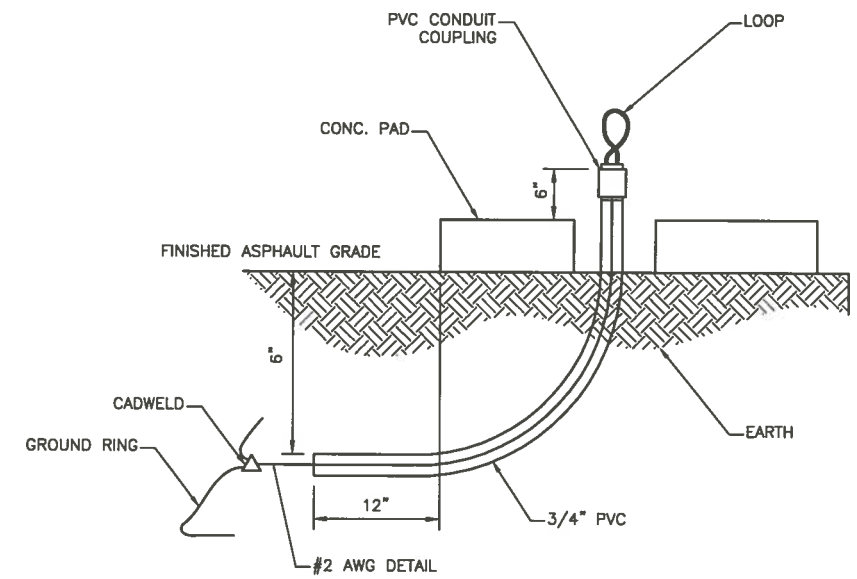

LOOP DETAIL | N.T.S. | 1

NOTES:
1. DO NOT INSTALL CABLE GROUND KIT AT A BEND AND ALWAYS DIRECT GROUND WIRE DOWN TO ANTENNA GROUND BAR.
2. WEATHER PROOFING SHALL BE ANDREWS. (TYPE & PART NUMBER AS SUPPLIED OR RECOMMENDED BY CABLE MANUFACTURER.)

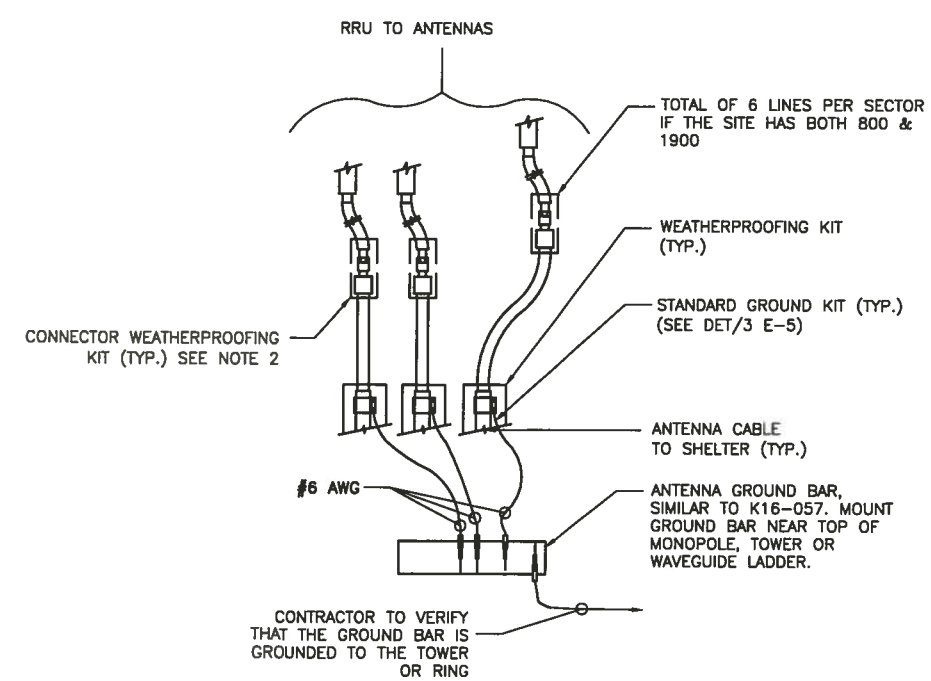

TYPICAL COAXIAL GROUNDING | N.T.S. | 2

NOT USED | N.T.S. | 4

T-Mobile

T-MOBILE WEST, LLC
2323 DELGANY STREET
DENVER, CO 80216

POWDER RIVER
Engineering Services, LLC
www.powderriverdev.com

LICENSE #: N/A

REVISIONS

REV	DATE	DESCRIPTION	INT
B	06/13/16	ISSUED FOR REVIEW 90%	JE
A	05/10/16	ISSUED FOR REVIEW 90%	JE

SITE INFORMATION

DN04163B
SW SPRINGS

2520 ARLINGTON DR.
COLORADO SPRINGS, CO
80910

SHEET TITLE:
GROUNDING DETAILS

SHEET NUMBER:
G-4
CPC_CM1_16-00070

FIGURE 1